60 Hz

6Z855, 6Z875 6Z895, 6Z8125 Series

8″ SUBMERSIBLE
ELECTRIC PUMPS

Cod. 191012041 Rev.A Ed.09/2012

LOWARA
a xylem brand

6Z855, 6Z875, 6Z895, 6Z8125 SERIES
HYDRAULIC PERFORMANCE RANGE AT 60 Hz

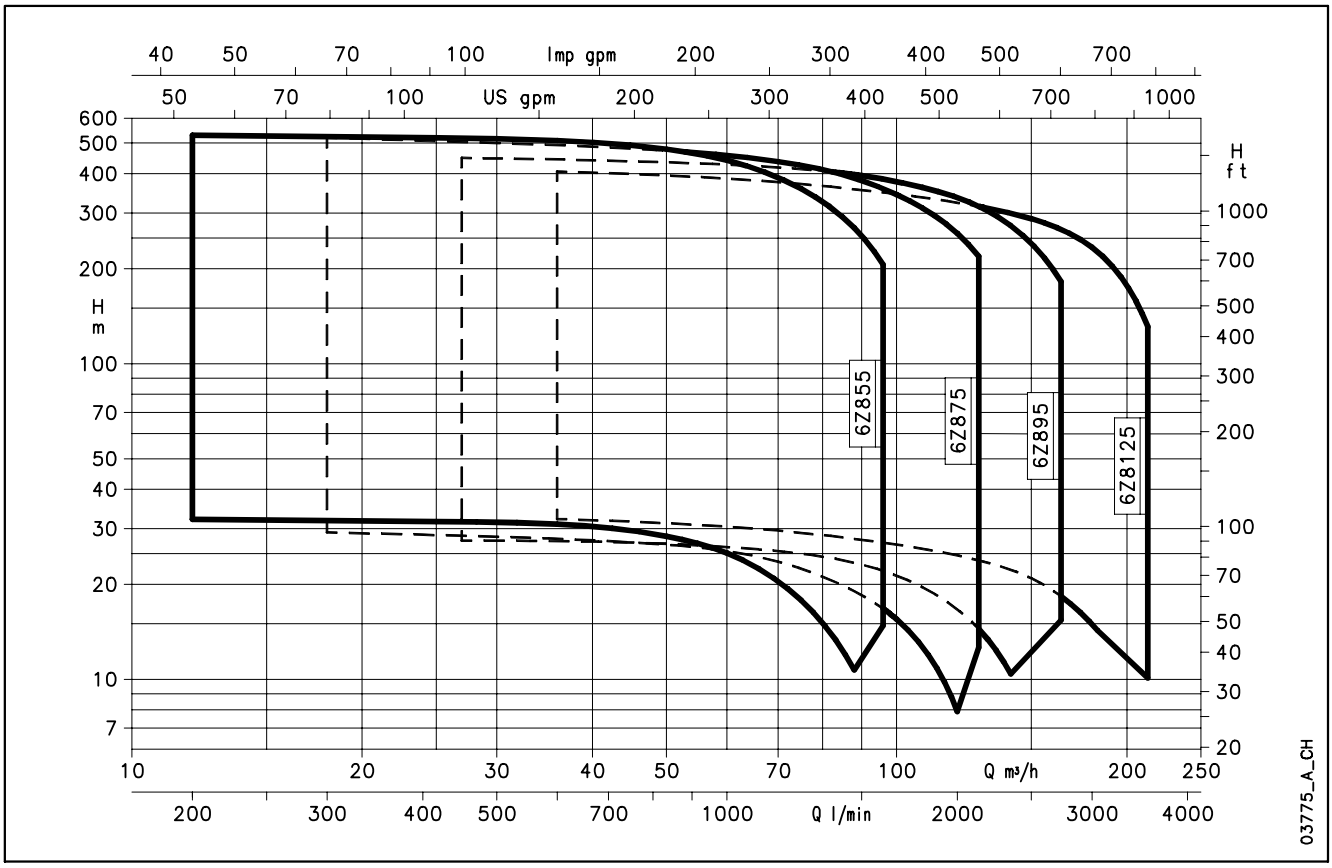

LOWARA
a xylem brand

CONTENTS

6Z8 Series Specifications 5

Table of Materials 6

Hydraulic Performance Range, 6Z8 Series 60 Hz 7

Pump Cross-Section and List of Main Components 28

L6C Series Motors 29

L6W Series Motors 35

L8W Series Motors 43

L10W Series Motors 51

Accessories 57

Technical Appendix 73

LOWARA
a xylem brand

8" Submersible Electric Pumps

6Z855
6Z875
6Z895
6Z8125
Series

MARKET SECTORS
AGRICULTURAL, INDUSTRIAL.

APPLICATIONS
- Water supply from deep wells.
- Pressure boosting and water distribution in civil and industrial systems.
- Supply of surge tanks and reservoirs.
- Firefighting and washing systems.
- Water level control.
- Irrigation.
- Mining.

SPECIFICATIONS
PUMP
- **Delivery**: up to 210 m^3/h.
- **Head**: up to 550 m.
- Maximum pump overall diameter (2 cable covers included): 198 mm for all versions.
- Maximum electric pump immersion depth: 350 m with L6W, L8W, L10W motors.
- Maximum permissible quantity of suspended sand: 100 g/m^3.
- Standard delivery outlet: Rp 5" for all versions.
- Motor power: from 5,5 to 150 kW.

MOTOR
- L6W, L8W, L10W rewindable three-phase motors with water filled winding.
- Three-phase version:
  L6W: 4 to 30 kW 230 V 60 Hz
  4 to 37 kW 380, 460 V 60 Hz.
  L8W: 30 to 93 kW 380, 460 V 60 Hz.
  L10W: 93 to 150 kW 380, 460 V 60 Hz.
- Maximum supply voltage variations: L6W, L8W, L10W ±10%.
- PVC windings for L6W, L8W, L10W.
- Horizontal operation: L6W, L8W, L10W all versions are designed for horizontal installation, provided that the direction of the axial thrust generated by the impellers is always from the pump to the motor.
- Maximum number of starts per hour: 15 (L6W), 10 (L8W) and 8 (L10W).
- Maximum temperature of water in contact with motor: L6W, L8W and L10W 30°C.

CONSTRUCTION FEATURES
PUMP
- Robust and lightweight, easy to maintain and corrosion resistant in non-aggressive environments.
  - **Impellers and diffusers** made of **stainless steel**.
  - **Delivery casing** made of **stainless steel**.
  - **Non-return valve** made of **stainless steel**, **with integrated spring**.
  - **Suction support** made of **stainless steel**.
  - **Shaft** made of **stainless steel**.
- The guide bearing and wear rings ensure high resistance to wear and guarantee the **costant and long-lasting performance of the hydraulic characteristics**.
- Coupling and flange mounting dimensions meet **NEMA** standards.
- 6ZR8 version in **DUPLEX stainless steel** is also available.

OPTIONAL FEATURES
MOTOR
- Different voltages and frequencies.
- High temperature versions.

ACCESSORIES
- Coupling flange.
- Panels.
- Cables.
- Splices.

TABLE OF MATERIALS 6Z8

COMPONENT	MATERIAL	DESIGNATION	
		EUROPE	USA
Delivery head / Valve Casing	Stainless steel	EN 10213-4-GX5CrNi19-10 (1.4308)	A744-CF 8
Valve	Stainless steel	EN 10213-4-GX5CrNi19-10 (1.4308)	A744-CF 8
Valve seat	NBR 90		
Valve spring	Stainless steel	EN 10088-1-X5CrNiMo17-12-2 (1.4401)	AISI 316
Diffuser / Bowl	Stainless steel	EN 10213-4-GX5CrNi19-10 (1.4308)	A744-CF 8
Diffuser O-Ring	NBR 70		
Impeller	Stainless steel	EN 10213-4-GX5CrNi19-11 (1.4308)	A744-CF 8
Taperlock	Duplex stainless steel	EN 10088-1-X2CrNiMoN22-5-3 (1.4462)	A276/A790-S31803
Wear ring	POM (DELRIN ®)		
Lower support / Suction Casing	Stainless steel	EN 10213-4-GX5CrNi19-10 (1.4308)	A744-CF 8
Suction strainer	Stainless steel	EN 10088-1-X5CrNi18-10 (1.4301)	AISI 304
Pump shaft	Stainless steel	EN 10088-1-X17CrNi16-2 (1.4057)	AISI 431
Coupling	Stainless steel	EN 10088-1-X2CrNiMoN22-5-3 (1.4462)	A276/A790-S31803
Bearing bush	EPDM + LOXAMID ®		
Thrust Bearing	PTFE + 25% carbon		
Screw, stud, nut	Stainless steel	ISO 3506-1/2 A4-70	AISI 316
Cable protection	Stainless steel	EN 10088-1-X5CrNi18-10 (1.4301)	AISI 304

z8-2p50-en_e_tm

TABLE OF MATERIALS 6ZR8

COMPONENT	MATERIAL	DESIGNATION	
		EUROPE	USA
Delivery head / Valve Casing	Duplex stainless steel	EN 10213-4-GX2CrNiMoCuN25-6-3-3 (1.4517)	
Valve	Duplex stainless steel	EN 10213-4-GX2CrNiMoCuN25-6-3-3 (1.4517)	
Valve seat	NBR 90		
Valve spring	Hastelloy C4	DIN17744-NiMo16Cr16Ti (2.4610)	N06455
Diffuser / Bowl	Duplex stainless steel	EN 10213-4-GX2CrNiMoCuN25-6-3-3 (1.4517)	
Diffuser O-Ring	NBR 70		
Impeller	Duplex stainless steel	EN 10213-4-GX2CrNiMoCuN25-6-3-3 (1.4517)	
Taperlock	Duplex stainless steel	EN 10088-1-X2CrNiMoN22-5-3 (1.4462)	A276/A790-S31803
Wear ring	POM (DELRIN ®)		
Lower support / Suction Casing	Duplex stainless steel	EN 10213-4-GX2CrNiMoCuN25-6-3-3 (1.4517)	
Suction strainer	Stainless steel	EN 10088-1X1NiCrMoCu25-20-5 (1.4539)	AISI 904L
Pump shaft	Duplex stainless steel	EN 10088-1-X2CrNiMoN22-5-3 (1.4462)	A276/A790-S31803
Coupling	Duplex stainless steel	EN 10088-1-X2CrNiMoN22-5-3 (1.4462)	A276/A790-S31803
Bearing bush	EPDM + LOXAMID ®		
Thrust Bearing	PTFE + 25% carbon		
Screw, stud, nut	Duplex stainless steel	EN 10088-1-X2CrNiMoN22-5-3 (1.4462)	A276/A790-S31803
Cable protection	Stainless steel	EN 10088-1X1NiCrMoCu25-20-5 (1.4539)	AISI 904L

zr8-2p50-en_a_tm

IDENTIFICATION CODE

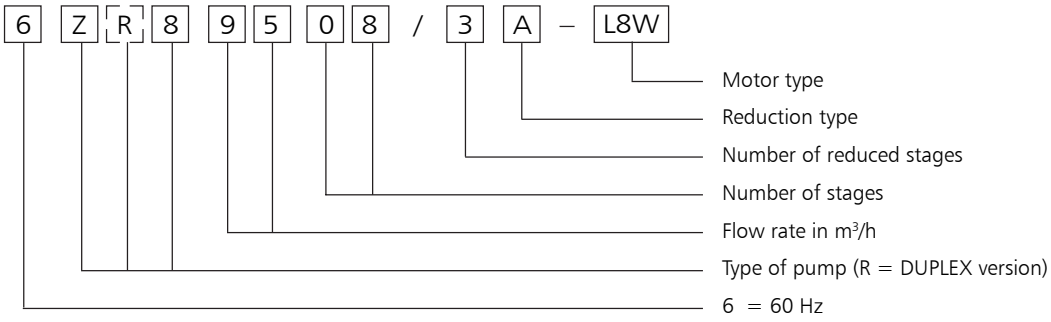

EXAMPLE : 6ZR8 9508/3A - L8W
8" electric pump at 60 Hz, made of DUPLEX, flow rate 95 m³/h, 10 stages including 3 reduced ones, coupled to an 8" L8W motor.

6Z8 SERIES
HYDRAULIC PERFORMANCE RANGE AT 60 Hz

6Z8	~ 3500 rpm	ISO 9906-Annex A

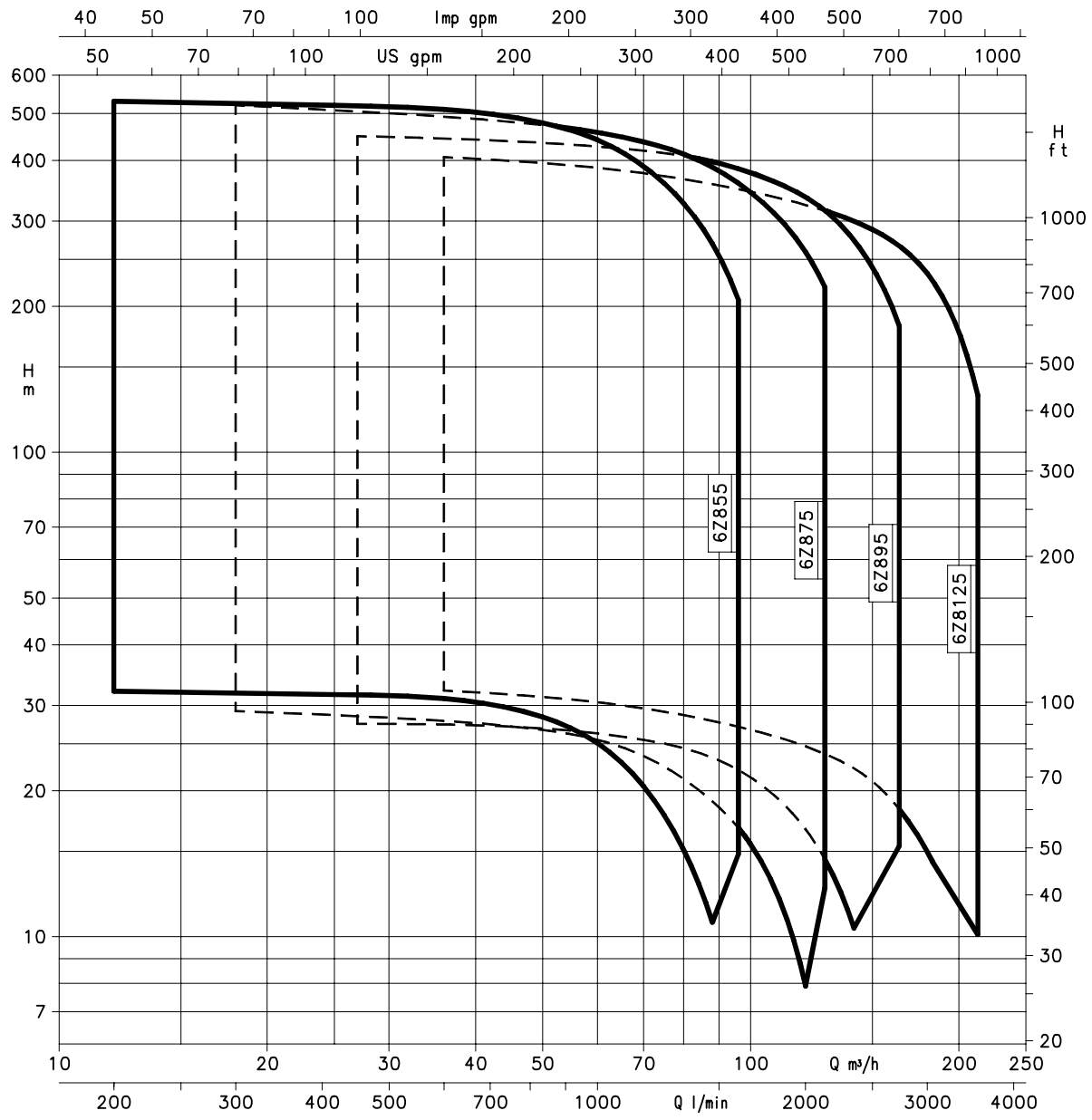

6Z855 SERIES, 1 TO 4 STAGES
OPERATING CHARACTERISTICS AT 60 Hz

PUMP TYPE	MOTOR * POWER		Q = DELIVERY					
			l/min 0	200	600	1000	1467	1600
			m^3/h 0	12	36	60	88	96
	kW	HP	H = TOTAL HEAD METERS COLUMN OF WATER					
6Z855 01/1A	5,5	7,5	33	32,1	31	25,1	10,7	
6Z855 01	7,5	10	41,3	40,2	38,5	33	19,6	14,8
6Z855 02/2A	11	15	66	64,2	62,1	50	21,3	
6Z855 02/1A	15	20	74,6	72,7	70,1	58,7	31	
6Z855 02	15	20	82,8	80,8	77,3	66,1	39,3	29,6
6Z855 03/3A	15	20	98,7	95,9	92,3	74	31,3	
6Z855 03/1A	18,5	25	115,4	112,3	107,4	90,3	49,7	
6Z855 03	22	30	123,8	120,7	115,4	98,5	58,2	43,7
6Z855 04/2A	30	40	147,7	143,6	137,3	113,3	59,4	
6Z855 04	30	40	165,9	161,7	154,9	133,1	79,8	60,4

* SERVICE FACTOR = 1.15

6z855-2p60-en_a_th

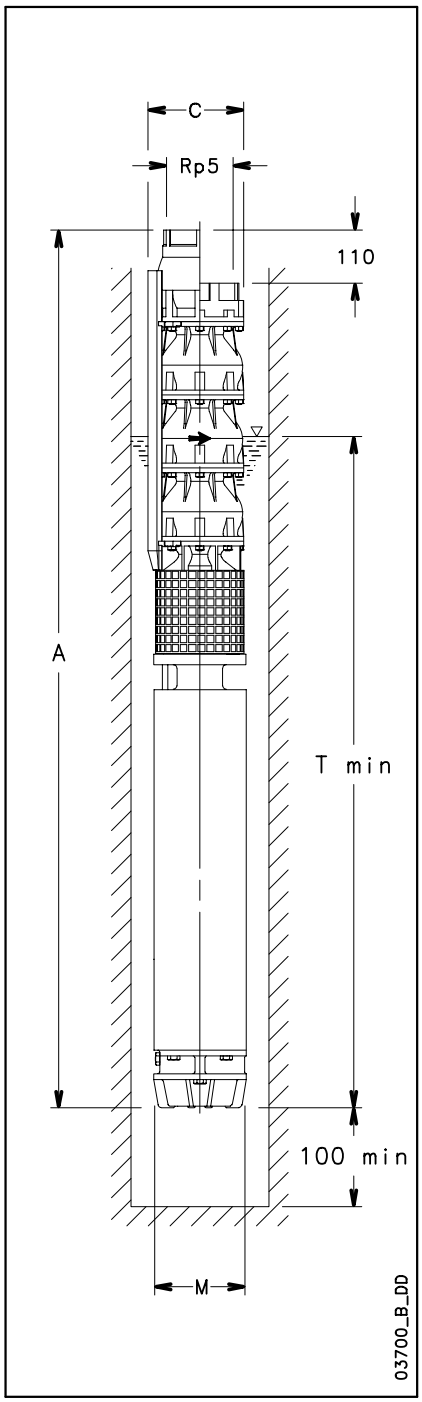

DIMENSIONS AND WEIGHTS

PUMP TYPE	DIMENSIONS (mm)				WEIGHT
	A (4)	C (1)	M	Tmin (2)	kg (3)
6Z855 01/1A-L6W	1173	200	144	1613	69
6Z855 01-L6W	1213	200	144	1653	73
6Z855 02/2A-L6W	1418	200	144	1723	90
6Z855 02/1A-L6W	1528	200	144	1833	101
6Z855 02-L6W	1528	200	144	1833	102
6Z855 03/3A-L6W	1663	200	144	1833	110
6Z855 03/1A-L6W	1733	200	144	1903	118
6Z855 03-L6W	1773	200	144	1943	121
6Z855 04/2A-L6W	2116	200	144	2151	146
6Z855 04-L6W	2116	200	144	2151	147

6z855-2p60-en_b_td

1) Max electric-pump diameter with 2 motor cables included.
   In case of 1 motor cable C = 198 mm with L6W motor.
2) T min valid only for max. flow speed of 4,2 m/s.
   For higher speeds, please contact our sales network.
3) Without cables.
4) For pumps without non-return valve, reduce dimension A by 110 mm, and reduce weight by 4 Kg.

LOWARA
a xylem brand

6Z855 SERIES, 1 TO 4 STAGES
OPERATING CHARACTERISTICS AT 60 Hz

6Z855	~ 3500 rpm	ISO 9906-Annex A

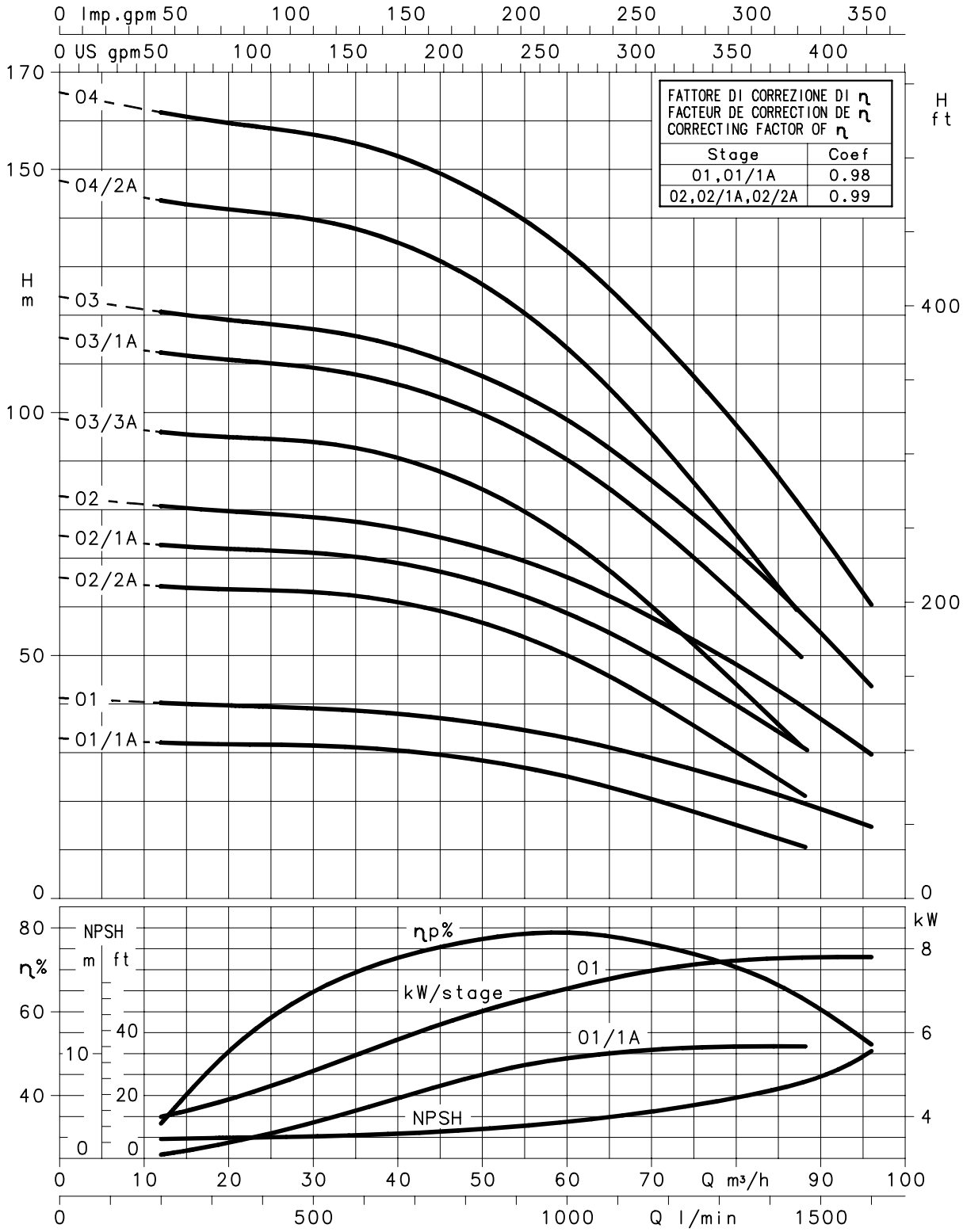

The head loss of the non-return valve is included.
These performances are valid for liquids with density ρ = 1,0 Kg/dm³ and kinematic viscosity υ = 1 mm²/sec.

6Z855 SERIES, 5 TO 13 STAGES
OPERATING CHARACTERISTICS AT 60 Hz

PUMP TYPE	MOTOR * POWER		Q = DELIVERY					
			l/min 0	200	600	1000	1467	1600
			m^3/h 0	12	36	60	88	96
	kW	HP	H = TOTAL HEAD METERS COLUMN OF WATER					
6Z855 05/2A	30	40	189,9	184,8	177,3	148,6	80	
6Z855 05	37	50	206,9	201,6	192,5	164,5	97,5	73,3
6Z855 06/2A	37	50	230,7	224,4	214,4	179,5	98,8	
6Z855 06	45	60	250,3	244,4	235,1	203,2	123,7	94,5
6Z855 07	52	70	294,2	287,5	277,8	242,4	150,9	116,8
6Z855 08	60	80	336	328,3	317,1	277	172,4	133,5
6Z855 09	67	90	378	369,4	356,7	311,2	193,5	149,7
6Z855 10	75	100	417,6	407,7	392,4	339,9	207,7	159,1
6Z855 11	75	100	458,5	447,5	430,3	371,8	225,8	172,4
6Z855 12	93	125	500	488,1	469,4	405,4	246,1	187,8
6Z855 13	93	125	542,7	529,8	509,8	441,3	269,4	206,2

* SERVICE FACTOR = 1.15

6z855a-2p60-en_b_th

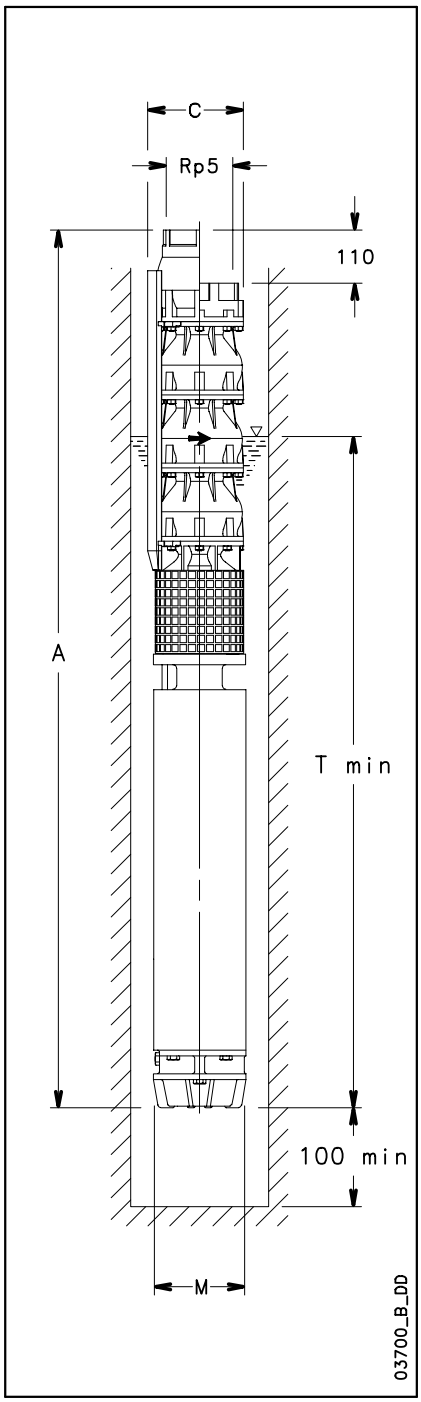

DIMENSIONS AND WEIGHTS

PUMP TYPE	DIMENSIONS (mm)				WEIGHT
	A (4)	C (1)	M	Tmin (2)	kg (3)
6Z855 05/2A-L6W	2251	200	144	2151	156
6Z855 05-L6W	2401	200	144	2301	170
6Z855 06/2A-L6W	2536	200	144	2301	178
6Z855 06-L8W	2430	203,3	192	2195	250
6Z855 07-L8W	2655	203,3	192	2285	278
6Z855 08-L8W	2880	203,3	192	2375	304
6Z855 09-L8W	3105	203,3	192	2465	331
6Z855 10-L8W	3330	203,3	192	2555	356
6Z855 11-L8W	3465	203,3	192	2555	365
6Z855 12-L8W	3800	303,3	192	2755	412
6Z855 13-L8W	3935	203,3	192	2755	420

6z855a-2p60-en_b_td

1) Max electric-pump diameter with 2 motor cables included.
In case of 1 motor cable C = 198 mm with L6W motor.
C = 201,5 mm with L8W motor.
2) T min valid only for max. flow speed of 4,2 m/s.
For higher speeds, please contact our sales network.
3) Without cables.
4) For pumps without non-return valve, reduce dimension A by 110 mm, and reduce weight by 4 Kg.

LOWARA
a xylem brand

6Z855 SERIES, 5 TO 13 STAGES
OPERATING CHARACTERISTICS AT 60 Hz

6Z855	~ 3500 rpm	ISO 9906-Annex A

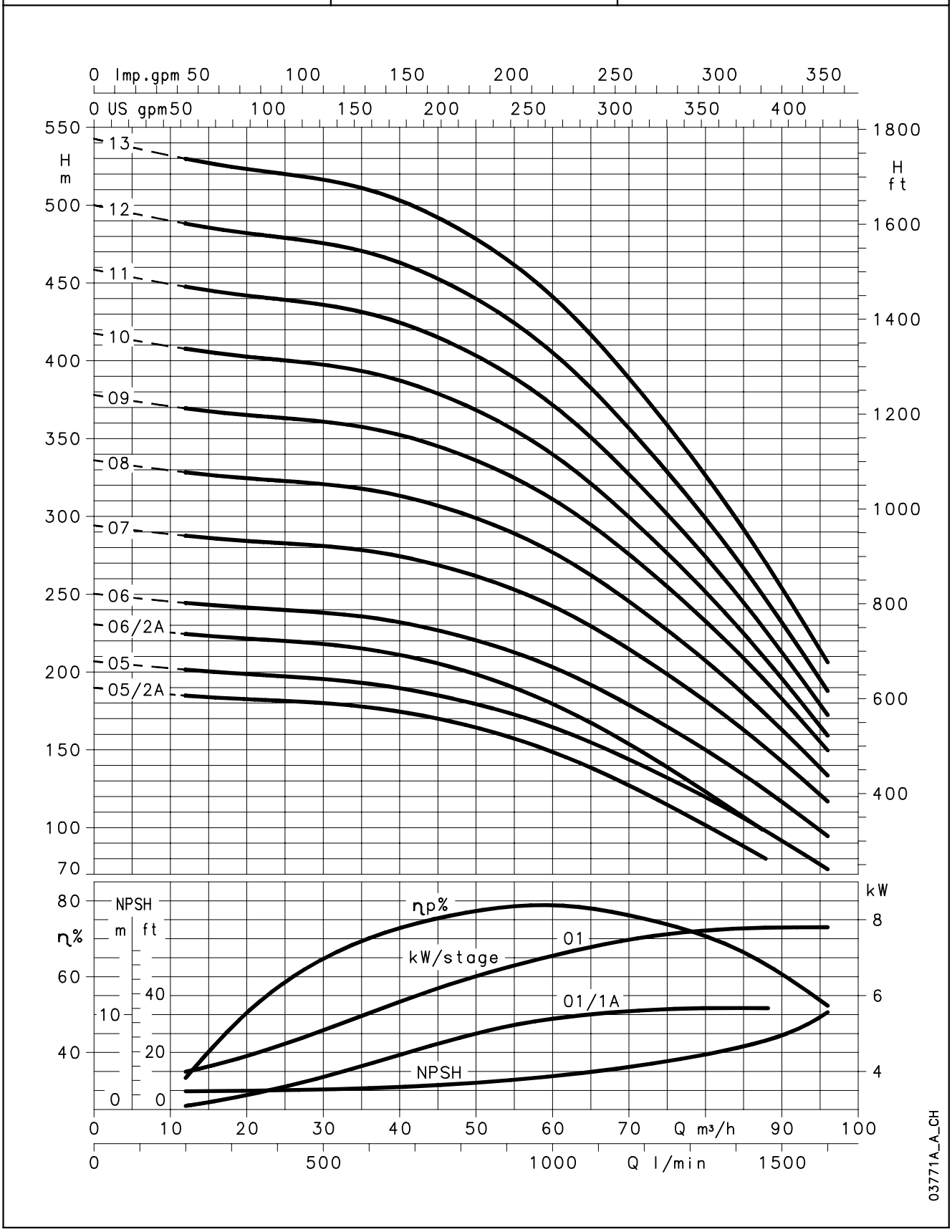

The head loss of the non-return valve is included.
These performances are valid for liquids with density ρ = 1,0 Kg/dm³ and kinematic viscosity υ = 1 mm²/sec.

6Z875 SERIES, 1 TO 4 STAGES
OPERATING CHARACTERISTICS AT 60 Hz

PUMP TYPE	MOTOR * POWER		Q = DELIVERY					
			l/min	0	300	800	1400	2000	2133
			m^3/h	0	18	48	84	120	128
	kW	HP	H = TOTAL HEAD METERS COLUMN OF WATER					
6Z875 01/1B	5,5	7,5	30,5	29,2	26,9	20,1	7,9	
6Z875 01/1C	7,5	10	38,9	36,6	33,3	27,1	15,8	12,6
6Z875 01	11	15	42,3	39,6	36,2	30,2	19,2	16,1
6Z875 02/2B	11	15	61,2	58,6	53,7	40,2	15,8	
6Z875 02/1A	15	20	74	69,8	63,7	50,9	27,8	
6Z875 02	18,5	25	84	78,4	71,4	59,3	37,3	31,2
6Z875 03/2B	18,5	25	102,5	97,2	88,8	69,2	34	
6Z875 03/1A	22	30	115,1	108,2	98,5	79,3	45	
6Z875 03	30	40	126,6	118,4	108	90	57,1	47,9
6Z875 04/2A	30	40	148,1	139,8	127,8	102,7	56,5	
6Z875 04/1A	30	40	157,6	147,9	134,8	109,9	64,7	
6Z875 04	37	50	167,8	156,8	142,6	118,2	74,1	61,8

* SERVICE FACTOR = 1.15

6z875-2p60-en_a_th

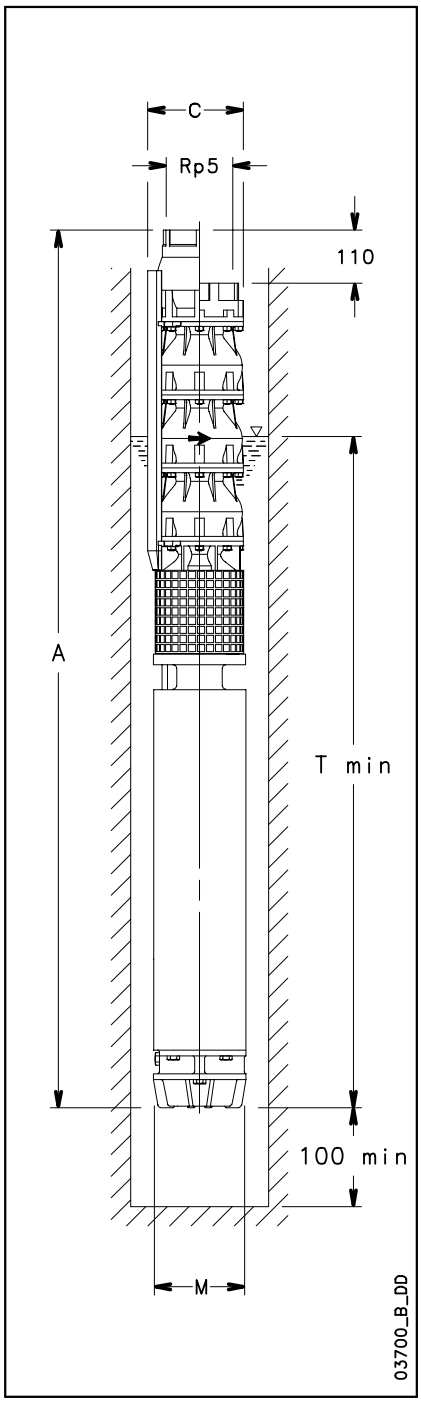

DIMENSIONS AND WEIGHTS

PUMP TYPE	DIMENSIONS (mm)				WEIGHT
	A (4)	C (1)	M	Tmin (2)	kg (3)
6Z875 01/1B-L6W	1190	200	144	1613	69
6Z875 01/1C-L6W	1230	200	144	1653	73
6Z875 01-L6W	1300	200	144	1723	81
6Z875 02/2B-L6W	1452	200	144	1723	91
6Z875 02/1A-L6W	1562	200	144	1833	103
6Z875 02-L6W	1632	200	144	1903	111
6Z875 03/2B-L6W	1784	200	144	1903	120
6Z875 03/1A-L6W	1824	200	144	1943	123
6Z875 03-L6W	2032	200	144	2151	140
6Z875 04/2A-L6W	2184	200	144	2151	149
6Z875 04/1A-L6W	2184	200	144	2151	149
6Z875 04-L6W	2334	200	144	2301	163

6z875-2p60-en_b_td

1) Max electric-pump diameter with 2 motor cables included.
   In case of 1 motor cable C = 198 mm with L6W motor.
2) T min valid only for max. flow speed of 4,2 m/s.
   For higher speeds, please contact our sales network.
3) Without cables.
4) For pumps without non-return valve, reduce dimension A by 110 mm, and reduce weight by 4 Kg.

6Z875 SERIES, 1 TO 4 STAGES
OPERATING CHARACTERISTICS AT 60 Hz

6Z875	~ 3500 rpm	ISO 9906-Annex A

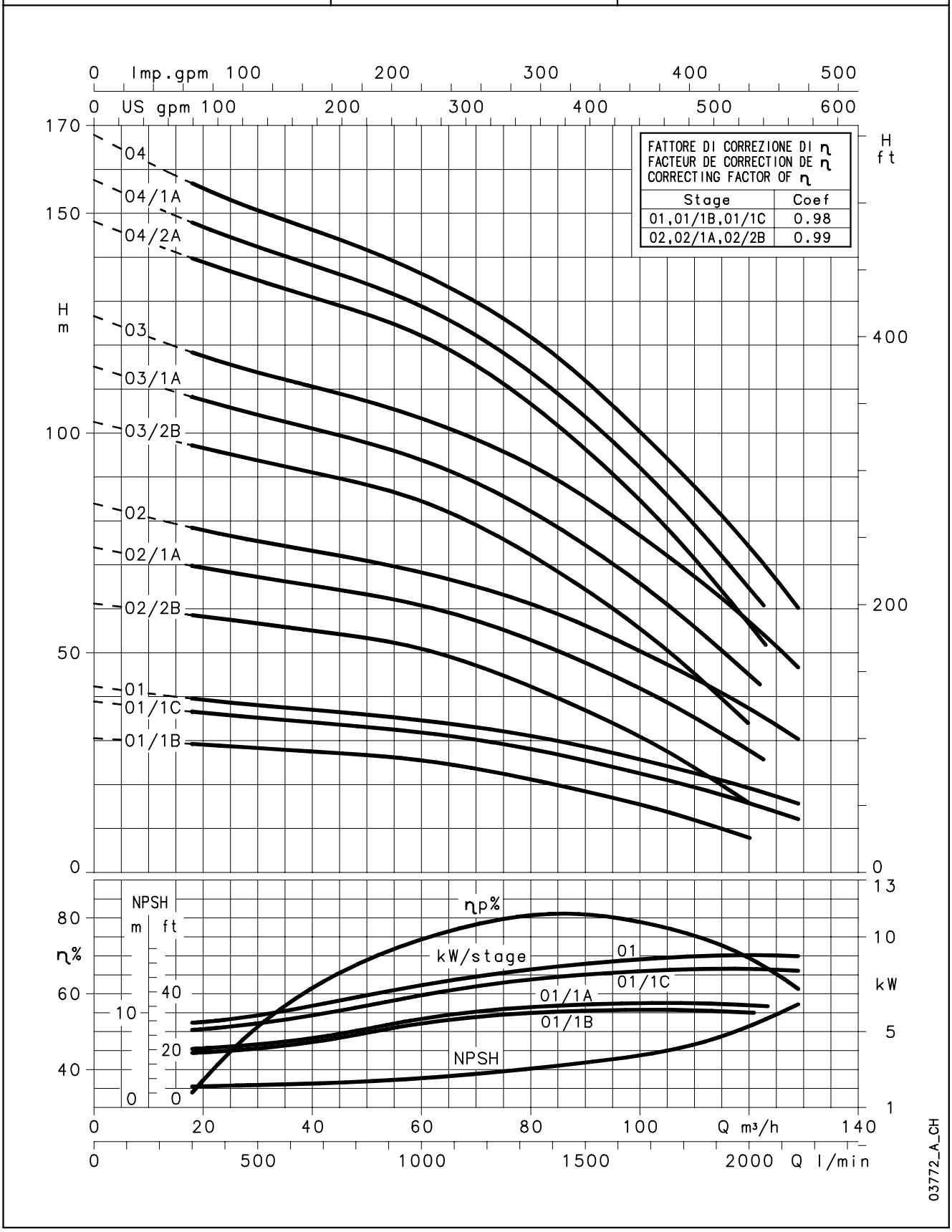

The head loss of the non-return valve is included.
These performances are valid for liquids with density ρ = 1,0 Kg/dm³ and kinematic viscosity υ = 1 mm²/sec.

6Z875 SERIES, 5 TO 13 STAGES
OPERATING CHARACTERISTICS AT 60 Hz

PUMP TYPE	MOTOR * POWER		Q = DELIVERY					
			l/min 0	300	800	1400	2000	2133
			m³/h 0	18	48	84	120	128
	kW	HP	H = TOTAL HEAD METERS COLUMN OF WATER					
6Z875 05/2A	37	50	189	177,9	162	130,2	72,8	
6Z875 05/1A	37	50	198,3	185,8	168,4	137,2	80,8	
6Z875 05	45	60	212,3	198,5	181,4	151,6	97	81,5
6Z875 06/2A	45	60	234	220,2	201,4	164,5	96,4	
6Z875 06	52	70	255,2	238,6	218,3	183	117,7	99,2
6Z875 07	60	80	299,6	280,2	257	216,8	104,9	119,4
6Z875 08	67	90	342,3	320,2	293,5	247,3	160,5	136
6Z875 09	75	100	381,7	356,9	326,2	272,6	174,2	146,5
6Z875 10	93	125	423,9	393,3	362,1	302,4	192,9	162,2
6Z875 11	93	125	467	436,7	399,2	334	213,9	180,1
6Z875 12	110	150	513,9	480,8	440,7	371,2	240,7	204
6Z875 13	110	150	556	520,1	476,5	400,6	259,1	219,2

* SERVICE FACTOR = 1.15

6z875a-2p60-en_b_th

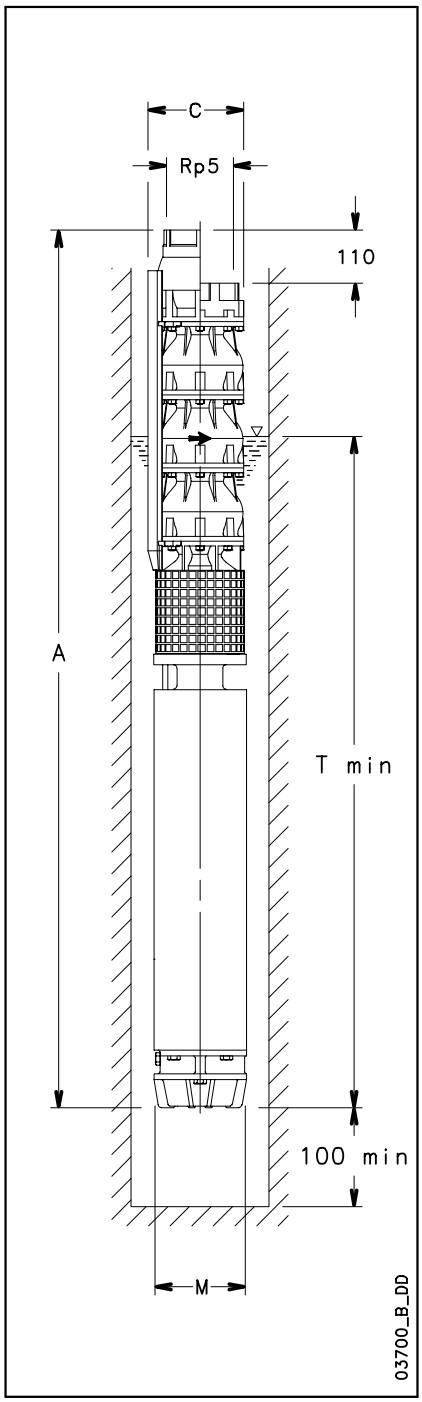

DIMENSIONS AND WEIGHTS

PUMP TYPE	DIMENSIONS (mm)				WEIGHT
	A (4)	C (1)	M	Tmin (2)	kg (3)
6Z875 05/2A-L6W	2486	200	144	2301	172
6Z875 05/1A-L6W	2486	200	144	2301	172
6Z875 05-L8W	2380	203,3	192	2195	244
6Z875 06/2A-L8W	2532	203,3	192	2195	253
6Z875 06-L8W	2622	203,3	192	2285	273
6Z875 07-L8W	2864	203,3	192	2375	299
6Z875 08-L8W	3106	203,3	192	2465	326
6Z875 09-L8W	3348	203,3	192	2555	353
6Z875 10-L8W	3700	203,3	192	2755	400
6Z875 11-L8W	3852	203,3	192	2755	409
6Z875 12-L10W	3951	236	236	2702	529
6Z875 13-L10W	4103	236	236	2702	538

6z875a-2p60-en_b_td

1) Max electric-pump diameter with 2 motor cables included.
In case of 1 motor cable C = 198 mm with L6W motor.
C = 201,5 mm with L8W motor.
C = 236 mm with L10W motor.
2) T min valid only for max. flow speed of 4,2 m/s.
For higher speeds, please contact our sales network.
3) Without cables.
4) For pumps without non-return valve, reduce dimension A by 110 mm, and reduce weight by 4 Kg.

6Z875 SERIES, 5 TO 13 STAGES
OPERATING CHARACTERISTICS AT 60 Hz

6Z875	~ 3500 rpm	ISO 9906-Annex A

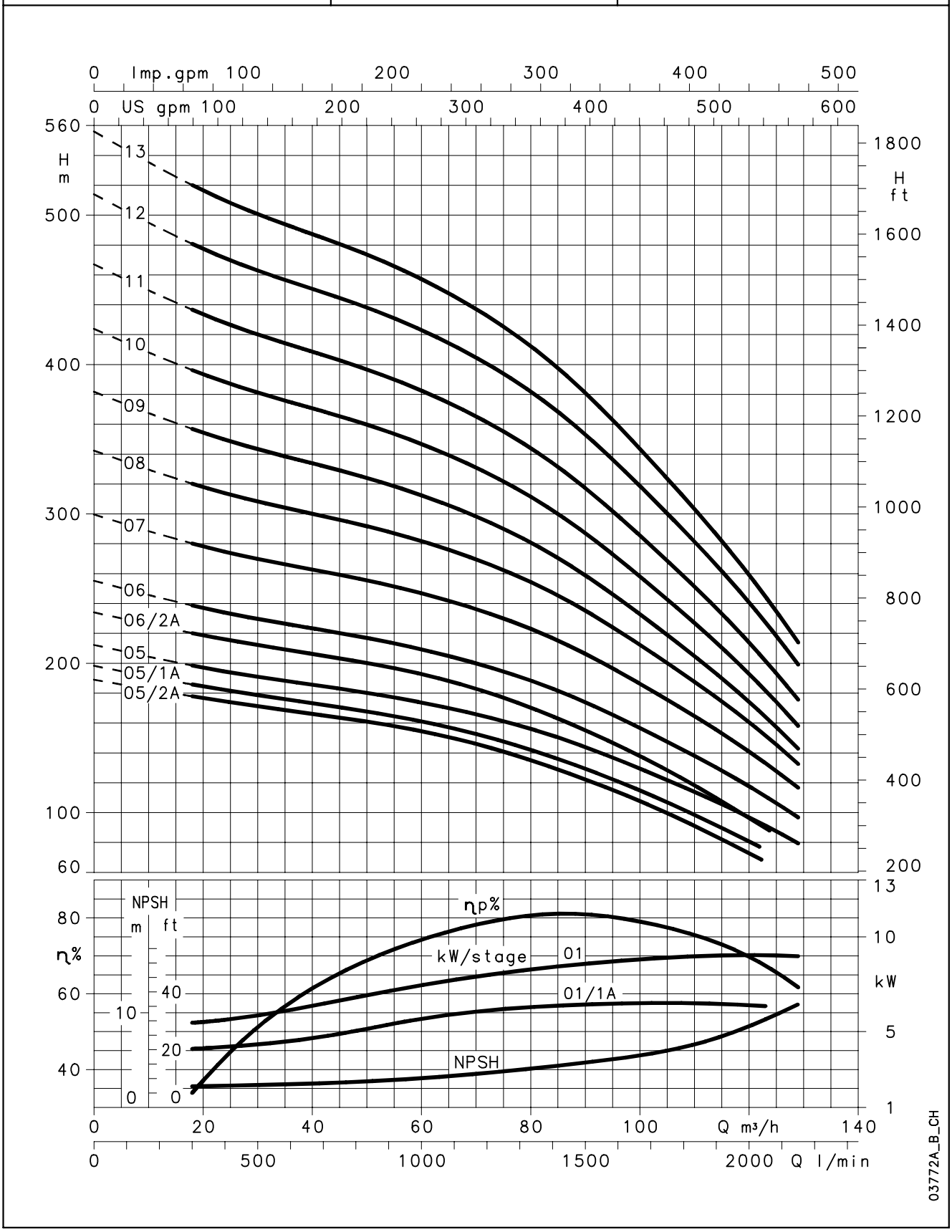

The head loss of the non-return valve is included.
These performances are valid for liquids with density ρ = 1,0 Kg/dm³ and kinematic viscosity υ = 1 mm²/sec.

6Z895 SERIES, 1 TO 4 STAGES
OPERATING CHARACTERISTICS AT 60 Hz

PUMP TYPE	MOTOR * POWER		Q = DELIVERY					
			l/min 0	450	1100	1800	2350	2733
			m³/h 0	27	66	108	141	164
	kW	HP	H = TOTAL HEAD METERS COLUMN OF WATER					
6Z895 01/1B	11	15	27,7	27,5	25,8	19,6	10,4	
6Z895 01/1A	11	15	34	33,3	31,9	26,1	17,5	
6Z895 01	15	20	41,4	40,3	37,8	32	23,9	15,4
6Z895 02/2B	15	20	55,6	55,1	51,6	39,3	20,9	
6Z895 02/2A	18,5	25	67,7	66,1	62,9	51,1	33,8	
6Z895 02	30	40	81,9	79,5	74	61,9	45,1	28,1
6Z895 03/2B	30	40	97,2	95,6	89,8	72,1	45,7	
6Z895 03/2A	30	40	109	106,3	100,5	83	57,4	
6Z895 03	37	50	123,6	120	111,8	94,1	69,3	43,8
6Z895 04/2B	37	50	137,6	134,6	125,6	101,2	66,4	
6Z895 04/2A	45	60	151,5	148,1	140,3	117,6	84,4	
6Z895 04	52	70	165,9	161,6	151,4	128,4	95,9	62

* SERVICE FACTOR = 1.15

6z895-2p60-en_b_th

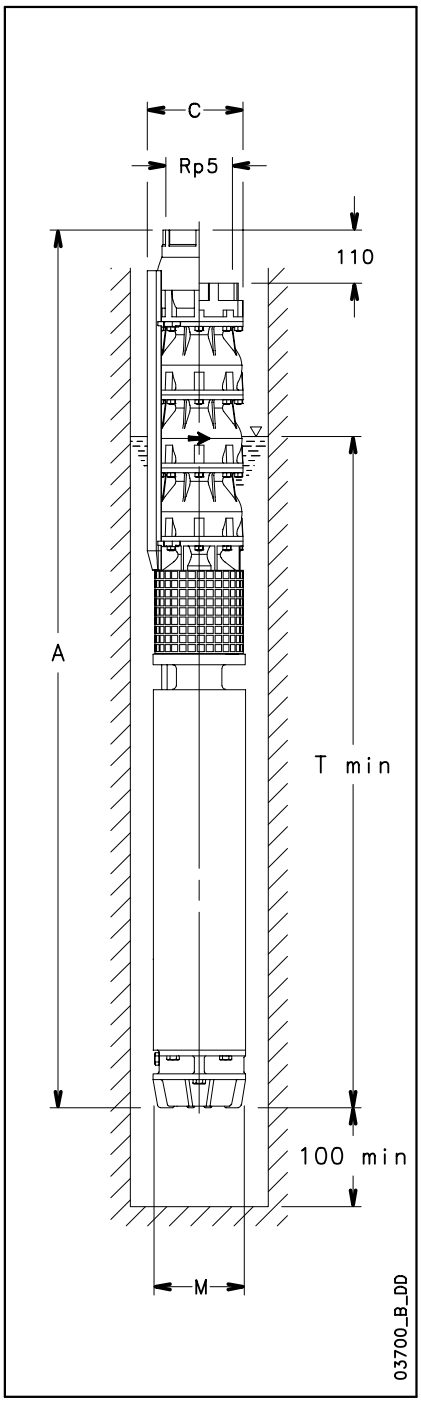

DIMENSIONS AND WEIGHTS

PUMP TYPE	DIMENSIONS (mm)				WEIGHT
	A (4)	C (1)	M	Tmin (2)	kg (3)
6Z895 01/1B-L6W	1300	200	144	1723	81
6Z895 01/1A-L6W	1300	200	144	1723	81
6Z895 01-L6W	1410	200	144	1833	93
6Z895 02/2B-L6W	1562	200	144	1833	103
6Z895 02/2A-L6W	1632	200	144	1903	111
6Z895 02-L6W	1880	200	144	2151	131
6Z895 03/2B-L6W	2032	200	144	2151	140
6Z895 03/2A-L6W	2032	200	144	2151	140
6Z895 03-L6W	2182	200	144	2301	154
6Z895 04/2B-L6W	2334	200	144	2301	163
6Z895 04/2A-L8W	2228	203,3	192	2195	235
6Z895 04-L8W	2318	203,3	192	2285	255

6z895-2p60-en_b_td

1) Max electric-pump diameter with 2 motor cables included.
In case of 1 motor cable C = 198 mm with L6W motor.
C = 201,5 mm with L8W motor.
2) T min valid only for max. flow speed of 4,2 m/s.
For higher speeds, please contact our sales network.
3) Without cables.
4) For pumps without non-return valve, reduce dimension A by 110 mm, and reduce weight by 4 Kg.

6Z895 SERIES, 1 TO 4 STAGES
OPERATING CHARACTERISTICS AT 60 Hz

6Z895	~ 3500 rpm	ISO 9906-Annex A

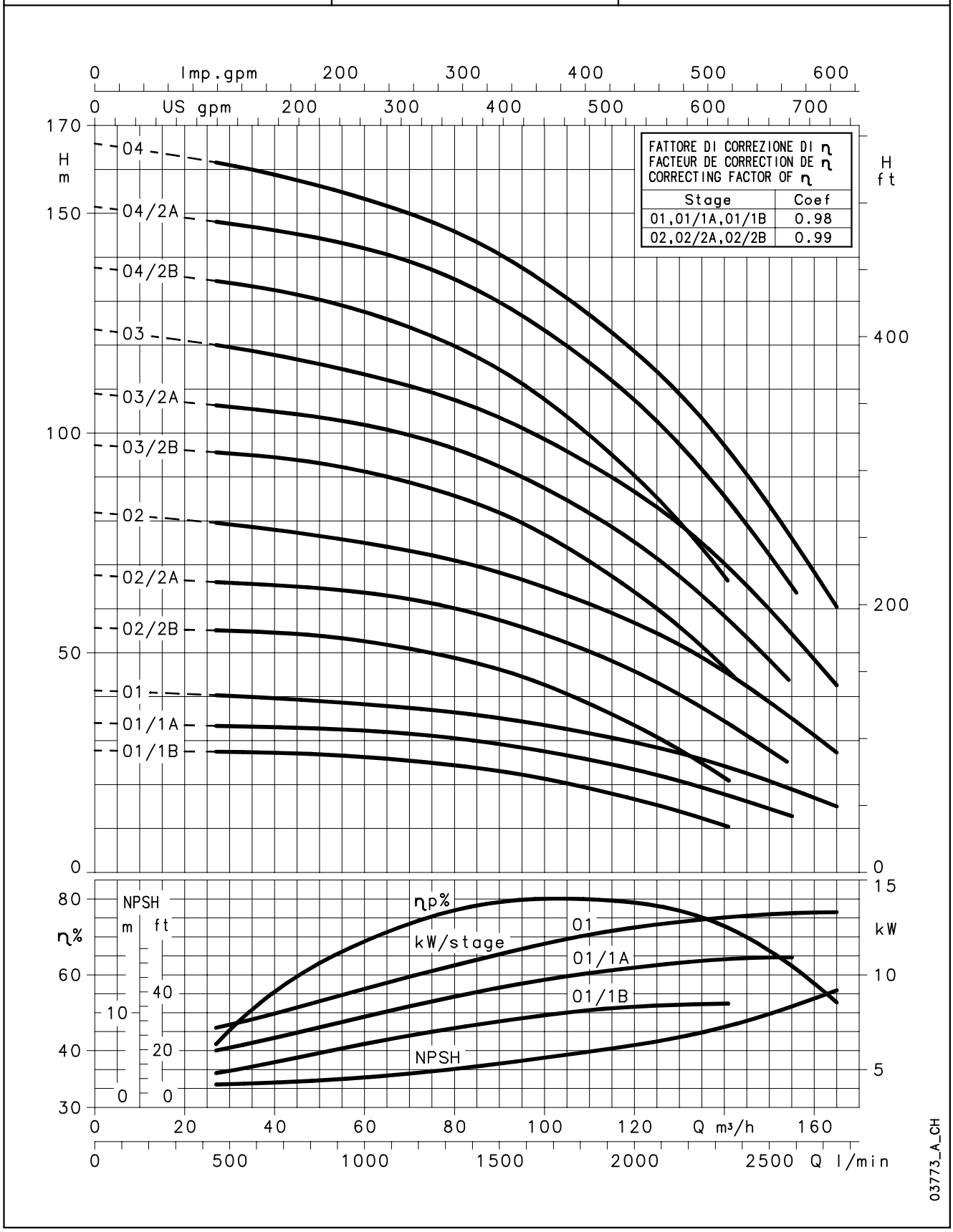

The head loss of the non-return valve is included.
ΔHv = 0,0000533*Q² Loss = **0,2** / **0,45** / **0,75** m at **60** / **90** / **120** m³/h
These performances are valid for liquids with density ρ = 1,0 Kg/dm³ and kinematic viscosity υ = 1 mm²/sec.

6Z895 SERIES, 5 TO 11 STAGES
OPERATING CHARACTERISTICS AT 60 Hz

PUMP TYPE	MOTOR * POWER		Q = DELIVERY					
			l/min 0	450	1100	1800	2600	2733
			m^3/h 0	27	66	108	156	164
	kW	HP	H = TOTAL HEAD METERS COLUMN OF WATER					
6Z895 05/3A	55	75	187	183,2	174,8	147,4	80,9	
6Z895 05	60	80	209,1	204	192,3	165,3	99,3	83,7
6Z895 06/3A	67	90	228,9	224	213,2	180,4	100,8	
6Z895 06	75	100	249,6	243,3	228,5	194,9	114,6	95,9
6Z895 07/3A	75	100	268,7	262,5	248,4	208,7	114,5	
6Z895 07	93	125	290,7	283,3	265,9	226,3	132,3	110,4
6Z895 08/3A	93	125	310,9	303,7	287,4	242,5	135,3	
6Z895 08	93	125	332,5	324	304,1	259,1	151,9	126,9
6Z895 09	110	150	376,3	367,3	345,9	296,4	177,2	149,1
6Z895 10	130	175	418,8	408,8	385,1	330,5	198,6	167,3
6Z895 11	130	175	460,1	449	422,6	362,1	216,5	182,1

* SERVICE FACTOR = 1.15

6z895a-2p60-en_b_th

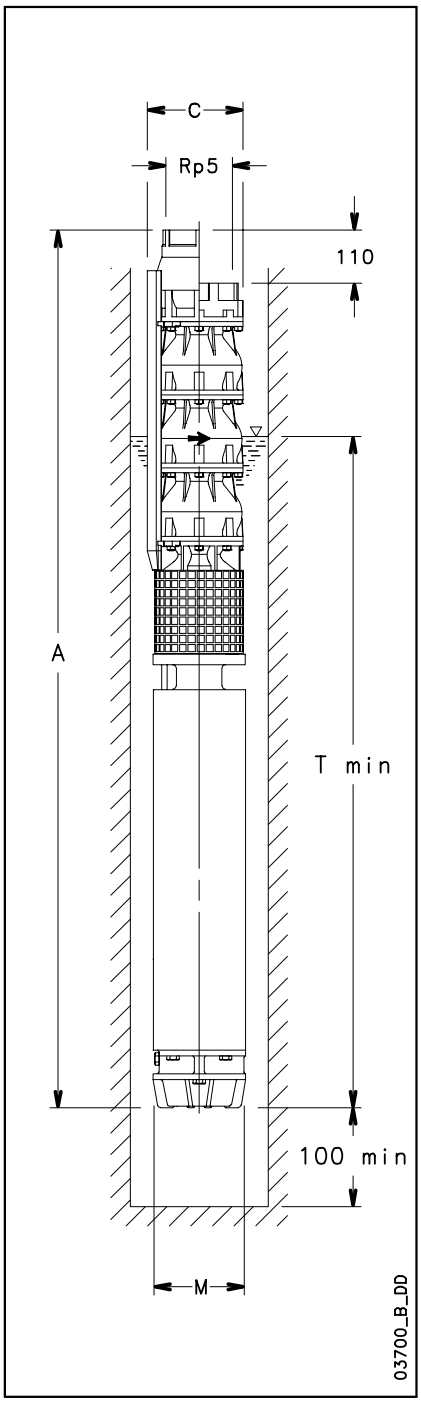

DIMENSIONS AND WEIGHTS

PUMP TYPE	DIMENSIONS (mm)				WEIGHT
	A (4)	C (1)	M	Tmin (2)	kg (3)
6Z895 05/3A-L8W	2510	203,3	192	2325	270
6Z895 05-L8W	2560	203,3	192	2325	281
6Z895 06/3A-L8W	2802	203,3	192	2465	309
6Z895 06-L8W	2892	203,3	192	2555	326
6Z895 07/3A-L8W	3044	203,3	192	2555	334
6Z895 07-L8W	3244	203,3	192	2755	372
6Z895 8/3A-L8W	3396	203,3	192	2755	381
6Z895 08-L8W	3396	203,3	192	2755	381
6Z895 09-L10W	3495	236	236	2702	502
6Z895 10-L10W	3797	236	236	2852	558
6Z895 11-L10W	3949	236	236	2852	567

6z895a-2p60-en_b_td

1) Max electric-pump diameter with 2 motor cables included.
   In case of 1 motor cable C = 201,5 mm with L8W motor.
   C = 236 mm with L10W motor.
2) T min valid only for max. flow speed of 4,2 m/s.
   For higher speeds, please contact our sales network.
3) Without cables.
4) For pumps without non-return valve, reduce dimension A by 110 mm, and reduce weight by 4 Kg.

6Z895 SERIES, 5 TO 11 STAGES
OPERATING CHARACTERISTICS AT 60 Hz

6Z895	~ 3500 rpm	ISO 9906-Annex A

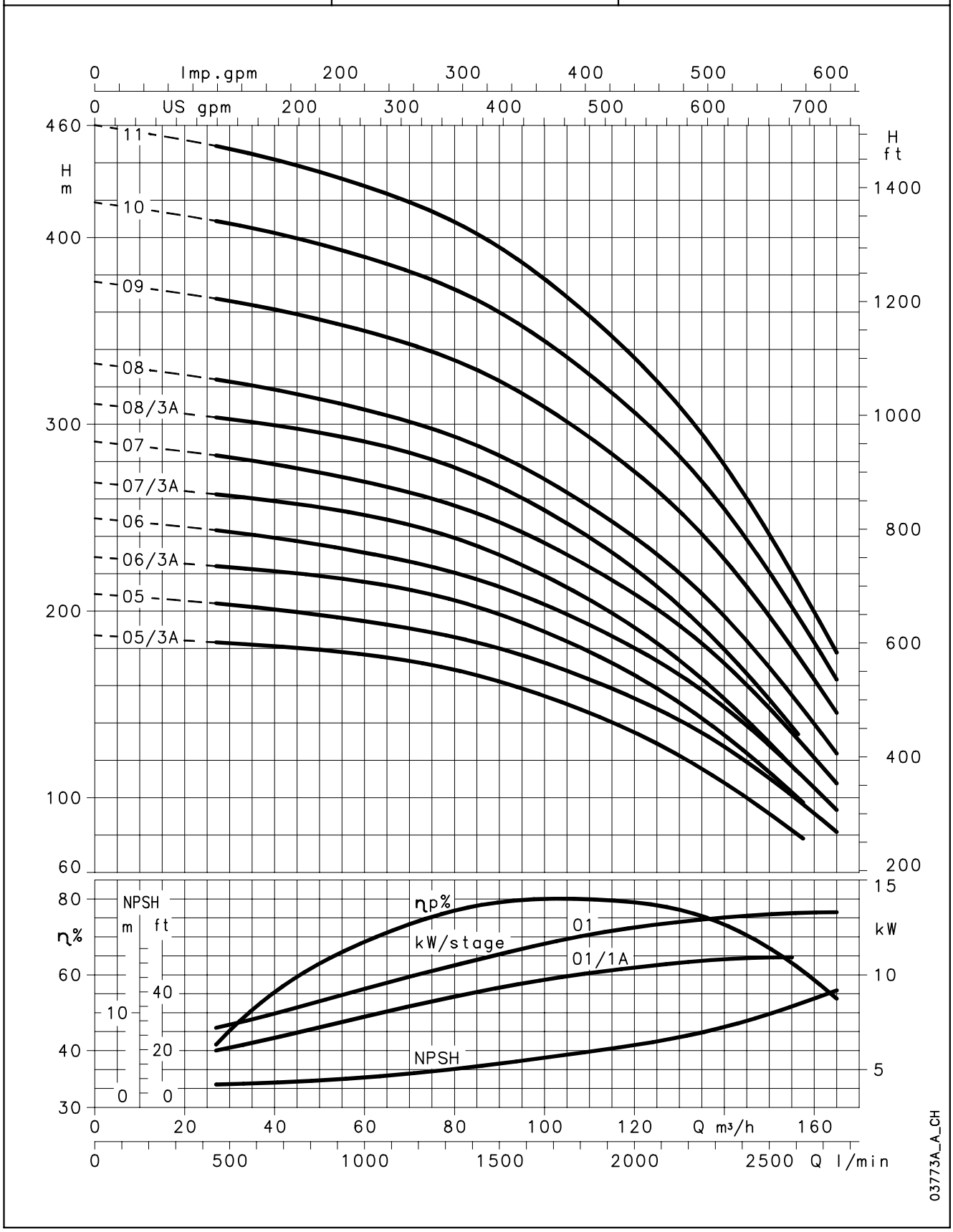

The head loss of the non-return valve is included.
ΔHv = 0,0000533*Q² Loss = **0,2** / **0,45** / **0,75** m at **60** / **90** / **120** m³/h
These performances are valid for liquids with density ρ = 1,0 Kg/dm³ and kinematic viscosity υ = 1 mm²/sec.

6Z8125 SERIES, 1 TO 4 STAGES
OPERATING CHARACTERISTICS AT 60 Hz

PUMP TYPE	MOTOR * POWER		Q = DELIVERY					
			l/min 0	600	1600	2500	3050	3550
			m³/h 0	36	96	150	183	213
	kW	HP	H = TOTAL HEAD METERS COLUMN OF WATER					
6Z8125 01/1A	11	15	34,9	32,2	27,1	20,9	14,3	
6Z8125 01	15	20	39,2	35,8	30,4	24,7	18,9	10,1
6Z8125 02/2B	15	20	60,1	55,7	45,6	31,9	17,8	
6Z8125 02/2A	18,5	25	69	63,5	53,3	40,9	27,6	
6Z8125 02	22	30	77,8	71,1	60,2	48,8	37	19,6
6Z8125 03/2B	30	40	100,6	92,7	77,3	58,1	38	
6Z8125 03/2A	30	40	108,7	99,8	84,1	66,2	47	
6Z8125 03	37	50	117,7	107,5	91,4	74,4	57	30,7
6Z8125 04/2B	37	50	138	126,8	105,8	80,8	54,8	
6Z8125 04/2A	45	60	150,6	138,2	117,3	93,9	69,2	
6Z8125 04	45	60	159,4	145,6	124,2	101,8	79	44,1

* SERVICE FACTOR = 1.15

6z8125-2p60-en_b_th

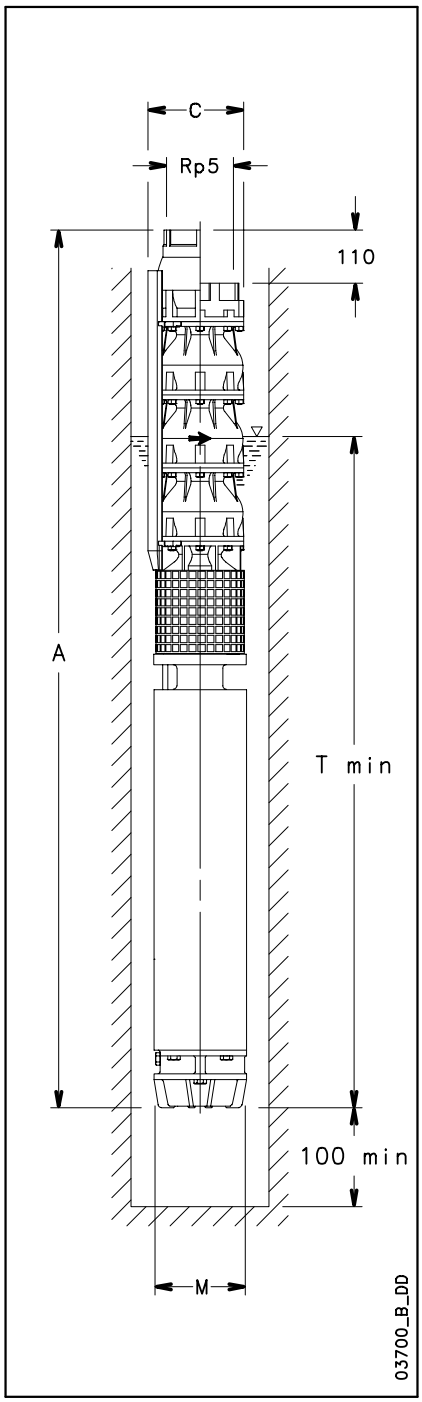

DIMENSIONS AND WEIGHTS

PUMP TYPE	DIMENSIONS (mm)				WEIGHT
	A (4)	C (1)	M	Tmin (2)	kg (3)
6Z8125 01/1A-L6W	1300	200	144	1723	81
6Z8125 01-L6W	1410	200	144	1833	93
6Z8125 02/2B-L6W	1562	200	144	1833	103
6Z8125 02/2A-L6W	1632	200	144	1903	111
6Z8125 02-L6W	1672	200	144	1943	114
6Z8125 03/2B-L6W	2032	200	144	2151	140
6Z8125 03/2A-L6W	2032	200	144	2151	140
6Z8125 03-L6W	2182	200	144	2301	154
6Z8125 04/2B-L6W	2334	200	144	2301	163
6Z8125 04/2A-L8W	2228	203,3	192	2195	235
6Z8125 04-L8W	2228	203,3	192	2195	235

6z8125-2p60-en_b_td

1) Max electric-pump diameter with 2 motor cables included.
In case of 1 motor cable C = 198 mm with L6W motor.
C = 201,5 mm with L8W motor.
2) T min valid only for max. flow speed of 4,2 m/s.
For higher speeds, please contact our sales network.
3) Without cables.
4) For pumps without non-return valve, reduce dimension A by 110 mm, and reduce weight by 4 Kg.

LOWARA
a xylem brand

6Z8125 SERIES, 1 TO 4 STAGES
OPERATING CHARACTERISTICS AT 60 Hz

6Z8125	~ 3500 rpm	ISO 9906-Annex A

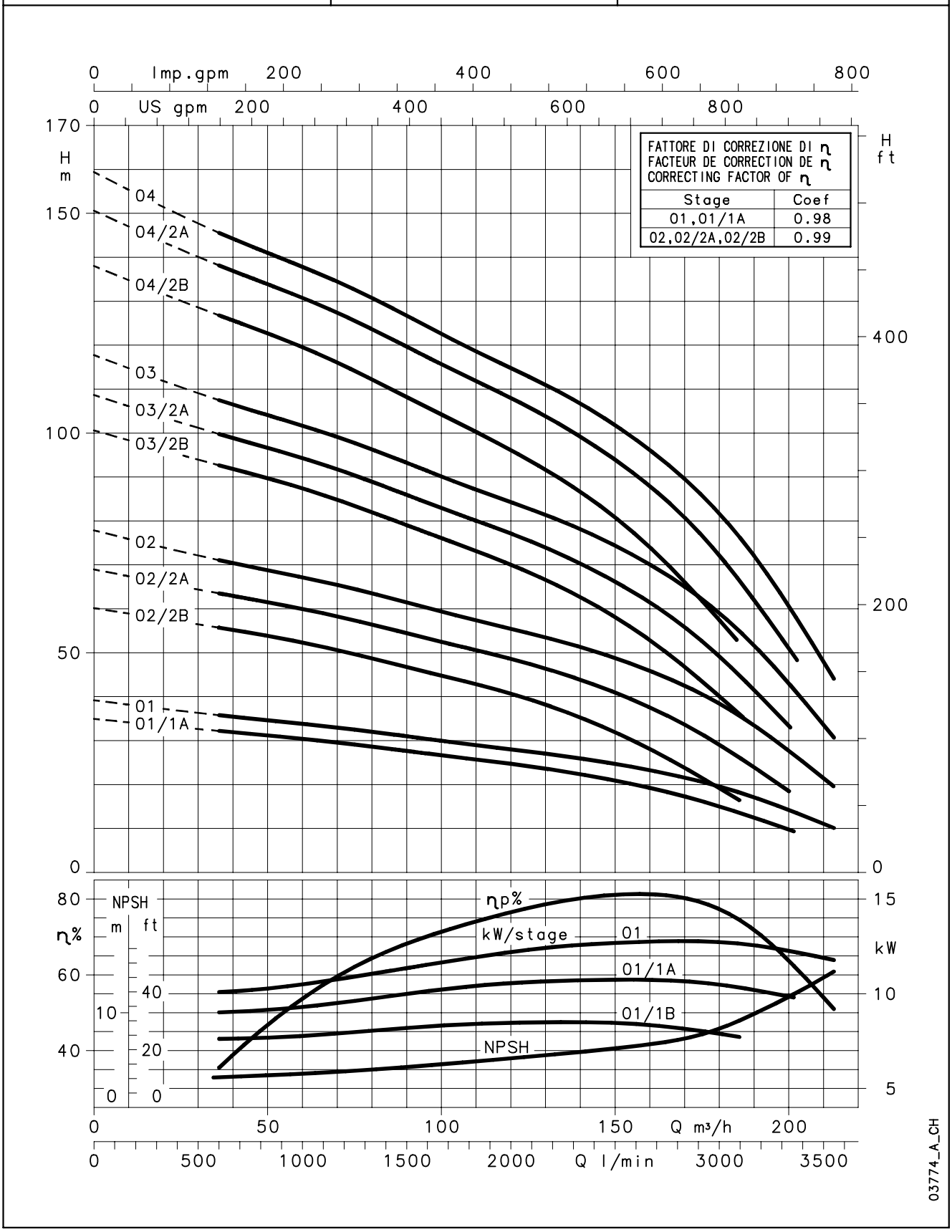

The head loss of the non-return valve is included.
ΔHv = 0,0000533*Q² Loss = **0,35** / **0,75** / **1,35** m at **80** / **120** / **160** m³/h
These performances are valid for liquids with density ρ = 1,0 Kg/dm³ and kinematic viscosity υ = 1 mm²/sec.

6Z8125 SERIES, 5 TO 11 STAGES OPERATING CHARACTERISTICS AT 60 Hz

PUMP TYPE	MOTOR * POWER		Q = DELIVERY					
			l/min 0	600	1600	2500	3350	3550
			m^3/h 0	36	96	150	201	213
	kW	HP	H = TOTAL HEAD METERS COLUMN OF WATER					
6Z8125 05/3A	52	70	188,5	173,1	147,5	118,4	63,3	
6Z8125 05	55	75	202,7	185,2	159,1	131,6	79,6	60,3
6Z8125 06/3A	67	90	229,1	210,2	179,3	144,8	79,2	
6Z8125 06	75	100	243,3	222,3	190,9	158	95,5	64
6Z8125 07/3A	75	100	265,9	243,7	207,1	166,6	89,9	
6Z8125 07	93	125	280	255,8	218,6	179,5	105,6	78,8
6Z8125 08/3A	93	125	307,0	281,3	239,5	193,6	106,5	
6Z8125 08	93	125	320,3	292,6	250,2	205,6	121,2	90,5
6Z8125 09	110	150	364,5	332,9	285,6	236	142,1	107,3
6Z8125 10	130	175	405,7	370,7	318	263,0	159,2	120,4
6Z8125 11	130	175	445,2	406,7	349,0	288,1	173,5	130,9

* SERVICE FACTOR = 1.15

6z8125a-2p60-en_b_th

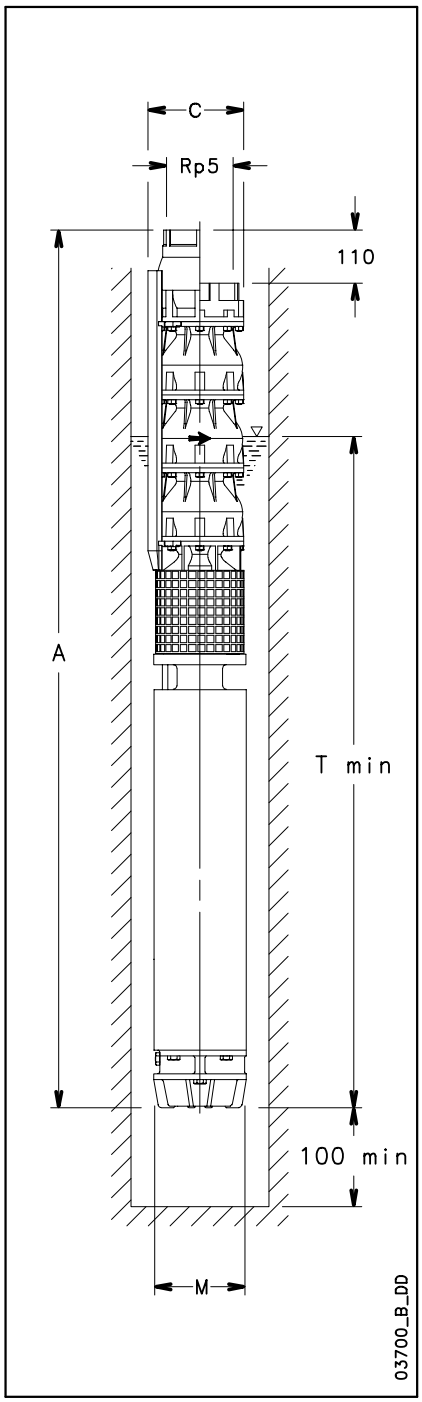

DIMENSIONS AND WEIGHTS

PUMP TYPE	DIMENSIONS (mm)				WEIGHT
	A (4)	C (1)	M	Tmin (2)	kg (3)
6Z8125 05/3A-L8W	2470	203,3	192	2285	264
6Z8125 05-L8W	2510	203,3	192	2325	270
6Z8125 06/3A-L8W	2802	203,3	192	2465	309
6Z8125 06-L8W	2892	203,3	192	2555	326
6Z8125 07/3A-L8W	3044	203,3	192	2555	334
6Z8125 07-L8W	3244	203,3	192	2755	372
6Z8125 8/3A-L8W	3396	203,3	192	2755	381
6Z8125 08-L8W	3396	203,3	192	2755	381
6Z8125 09-L10W	3516	236	236	2702	502
6Z8125 10-L10W	3818	236	236	2852	558
6Z8125 11-L10W	3970	236	236	2852	567

6z8125a-2p60-en_b_td

1) Max electric-pump diameter with 2 motor cables included.
In case of 1 motor cable C = 201,5 mm with L8W motor.
C = 236 mm with L8W motor.
2) T min valid only for max. flow speed of 4,2 m/s.
For higher speeds, please contact our sales network.
3) Without cables.
4) For pumps without non-return valve, reduce dimension A by 110 mm, and reduce weight by 4 Kg.

LOWARA
a xylem brand

6Z8125 SERIES, 5 TO 11 STAGES
OPERATING CHARACTERISTICS AT 60 Hz

6Z8125	~ 3500 rpm	ISO 9906-Annex A

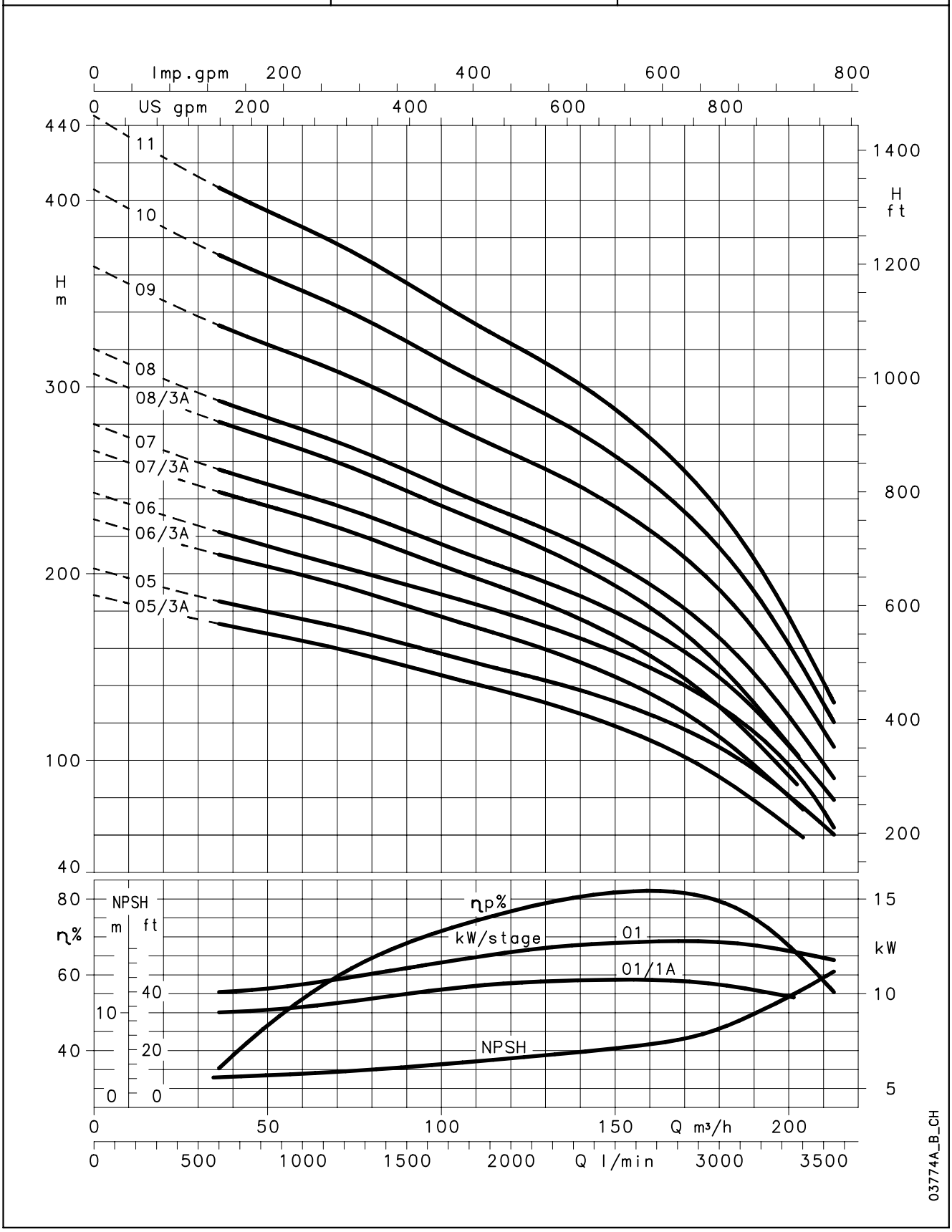

The head loss of the non-return valve is included.
ΔHv = 0,0000533*Q² Loss = **0,35** / **0,75** / **1,35** m at **80** / **120** / **160** m³/h
These performances are valid for liquids with density ρ = 1,0 Kg/dm³ and kinematic viscosity υ = 1 mm²/sec.

6Z855 SERIES
DIMENSIONS AND WEIGHTS

PUMP TYPE	MAX PUMP POWER at 3500 min^{-1} kW	DIMENSIONS (mm)			WEIGHT
		L (3)	l	Umin (2)	kg (3)
6Z855 01/1A-6	5,8	325	235	1000	26,6
6Z855 01-6	8,0	325	235	1000	26,6
6Z855 02/2A-6	11,3	460	235	1000	35,2
6Z855 02/1A-6	13,5	460	235	1000	35,2
6Z855 02-6	15,8	460	235	1000	35,2
6Z855 03/3A-6	16,8	595	235	1000	43,9
6Z855 03/1A-6	21,2	595	235	1000	43,9
6Z855 03-6	23,4	595	235	1000	43,9
6Z855 04/2A-6	26,5	730	235	1000	52,5
6Z855 04-6	30,9	730	235	1000	52,5
6Z855 05/2A-6	34,3	865	235	1000	61,2
6Z855 05-6	38,7	865	235	1000	61,2
6Z855 06/2A-6	42,0	1000	235	1000	69,8
6Z855 06-8	46,4	1000	235	1000	69,8
6Z855 07-8	54,1	1135	235	1000	77,8
6Z855 08-8	61,9	1270	235	1000	86,5
6Z855 09-8	69,6	1405	235	1000	95,1
6Z855 10-8	77,4	1540	235	1000	103,8
6Z855 11-8	85,1	1675	235	1000	112,4
6Z855 12-8	92,8	1810	235	1000	121,1
6Z855 13-8	100,6	1945	235	1000	129,7

6z855p-2p60-en_b_td

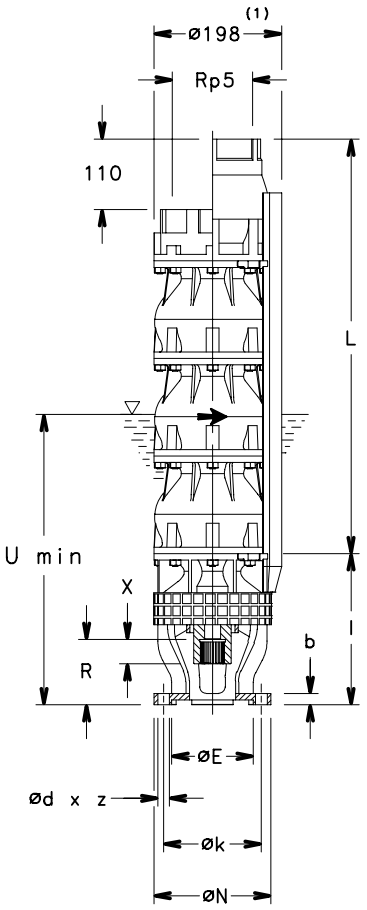

03705_A_DD

MOTOR CONNECTION

MOTOR	DIMENSIONS (mm)							
	N	k	d	z	b	E H7	R	X
6" (NEMA)	182	111	13,5	4	17	76,16	73	24
8" (NEMA)	182	152,4	18	4	17	127	101,3	40
Coupling 6" and 8" according to NEMA standards								

z8-mtcn-2p60_a_td

1) Max pump diameter with 1 motor cable included.
2) U min valid only for max. flow speed of 4,2 m/s.
For higher speeds, please contact our sales network.
3) For pumps without non-return valve, reduce dimension L by 110 mm, and reduce weight by 4 Kg.

6Z875 SERIES
DIMENSIONS AND WEIGHTS

PUMP TYPE	MAX PUMP POWER at 3500 min^{-1} kW	DIMENSIONS (mm)			WEIGHT
		L (3)	l	Umin (2)	kg (3)
6Z875 01/1B-6	6,2	342	235	1000	26,9
6Z875 01/1C-6	8,3	342	235	1000	26,9
6Z875 01-6	8,9	342	235	1000	26,9
6Z875 02/2B-6	12,3	494	235	1000	36,2
6Z875 02/1A-6	15,3	494	235	1000	36,2
6Z875 02-6	17,8	494	235	1000	36,2
6Z875 03/2B-6	21,2	646	235	1000	45,4
6Z875 03/1A-6	24,2	646	235	1000	45,4
6Z875 03-6	26,7	646	235	1000	45,4
6Z875 04/2A-6	30,7	798	235	1000	54,6
6Z875 04/1A-6	33,1	798	235	1000	54,6
6Z875 04-6	35,6	798	235	1000	54,6
6Z875 05/2A-6	39,6	950	235	1000	63,9
6Z875 05/1A-6	42,0	950	235	1000	63,9
6Z875 05-8	44,5	950	235	1000	63,9
6Z875 06/2A-8	48,5	1102	235	1000	72,4
6Z875 06-8	53,4	1102	235	1000	72,4
6Z875 07-8	62,3	1254	235	1000	81,7
6Z875 08-8	71,2	1406	235	1000	90,9
6Z875 09-8	80,1	1558	235	1000	100,1
6Z875 10-8	89,0	1710	235	1000	109,4
6Z875 11-8	97,9	1862	235	1000	118,6
6Z875 12-10	106,8	2014	256	1000	127,8
6Z875 13-10	115,7	2166	256	1000	137

6z875p-2p60-en_b_td

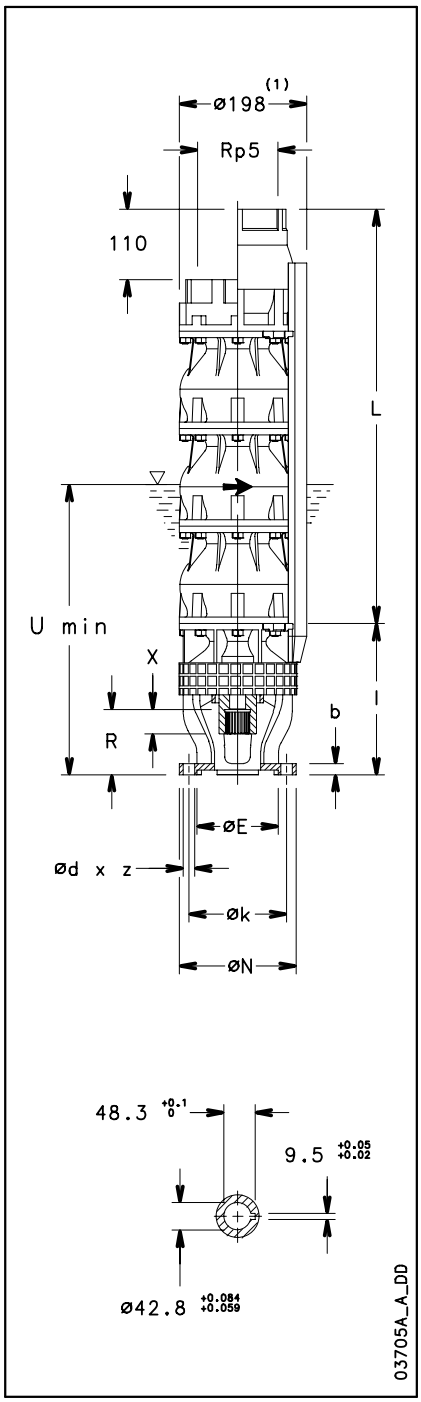

MOTOR CONNECTION

MOTOR	DIMENSIONS (mm)							
	N	k	d	z	b	E H7	R	X
6" (NEMA)	182	111	13,5	4	17	76,16	73	24
8" (NEMA)	182	152,4	18	4	17	127	101,3	40
10"	232	190,5	M16	4	21	127	101,3	84
Coupling 6" and 8" according to NEMA standards								

z8a-mtcn-2p50_a_td

1) Max pump diameter with 1 motor cable included.
2) U min valid only for max. flow speed of 4,2 m/s.
For higher speeds, please contact our sales network.
3) For pumps without non-return valve, reduce dimension L by 110 mm, and reduce weight by 4 Kg.

6Z895 SERIES
DIMENSIONS AND WEIGHTS

PUMP TYPE	MAX PUMP POWER at 3500 min^{-1} kW	DIMENSIONS (mm)			WEIGHT
		L (3)	l	Umin (2)	kg (3)
6Z895 01/1B-6	8,8	342	235	1000	26,9
6Z895 01/1A-6	11,1	342	235	1000	26,9
6Z895 01-6	13,5	342	235	1000	26,9
6Z895 02/2B-6	17,4	494	235	1000	36,2
6Z895 02/2A-6	22,1	494	235	1000	36,2
6Z895 02-6	26,7	494	235	1000	36,2
6Z895 03/2B-6	30,5	646	235	1000	45,4
6Z895 03/2A-6	35,1	646	235	1000	45,4
6Z895 03-6	39,6	646	235	1000	45,4
6Z895 04/2B-6	43,3	798	235	1000	54,6
6Z895 04/2A-8	47,8	798	235	1000	54,6
6Z895 04-8	52,3	798	235	1000	54,6
6Z895 05/3A-8	58,6	950	235	1000	63,9
6Z895 05-8	65,4	950	235	1000	63,9
6Z895 06/3A-8	71,7	1102	235	1000	73,1
6Z895 06-8	78,5	1102	235	1000	73,1
6Z895 07/3A-8	84,8	1254	235	1000	81,7
6Z895 07-8	91,6	1254	235	1000	81,7
6Z895 8/3A-8	97,9	1406	235	1000	90,9
6Z895 08-8	104,6	1406	235	1000	90,9
6Z895 09-10	117,7	1558	256	1000	100,1
6Z895 10-10	130,8	1710	256	1000	109,4
6Z895 11-10	143,9	1862	256	1000	118,6

6z895p-2p60-en_b_td

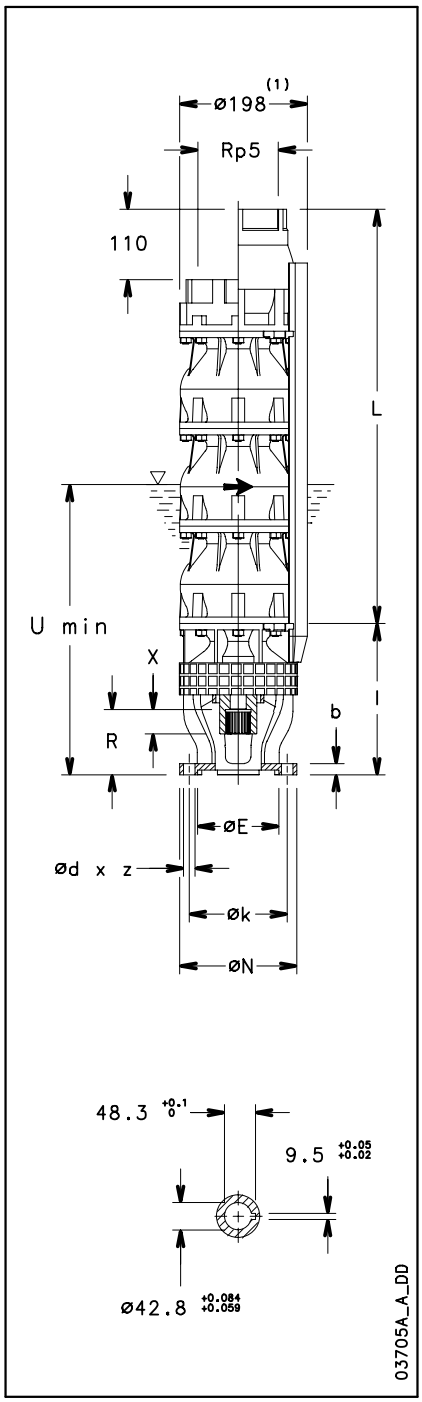

MOTOR CONNECTION

MOTOR	DIMENSIONS (mm)							
	N	k	d	z	b	E H7	R	X
6" (NEMA)	182	111	13,5	4	17	76,16	73	24
8" (NEMA)	182	152,4	18	4	17	127	101,3	40
10"	232	190,5	M16	4	21	127	101,3	84
Coupling 6" and 8" according to NEMA standards								

z8a-mtcn-2p50_a_td

1) Max pump diameter with 1 motor cable included.
2) U min valid only for max. flow speed of 4,2 m/s.
For higher speeds, please contact our sales network.
3) For pumps without non-return valve, reduce dimension L by 110 mm, and reduce weight by 4 Kg.

6Z8125 SERIES
DIMENSIONS AND WEIGHTS

PUMP TYPE	MAX PUMP POWER at 3500 min^{-1} kW	DIMENSIONS (mm)			WEIGHT
		L (3)	l	Umin (2)	kg (3)
6Z8125 01/1A-6	10,8	342	235	1000	26,9
6Z8125 01-6	13,1	342	235	1000	26,9
6Z8125 02/2B-6	17,6	494	235	1000	36,2
6Z8125 02/2A-6	21,5	494	235	1000	36,2
6Z8125 02-6	26,0	494	235	1000	36,2
6Z8125 03/2B-6	30,3	646	235	1000	45,4
6Z8125 03/2A-6	34,1	646	235	1000	45,4
6Z8125 03-6	38,6	646	235	1000	45,4
6Z8125 04/2B-6	42,7	798	235	1000	54,6
6Z8125 04/2A-8	46,5	798	235	1000	54,6
6Z8125 04-8	50,9	798	235	1000	54,6
6Z8125 05/3A-8	57,0	950	235	1000	63,9
6Z8125 05-8	63,7	950	235	1000	63,9
6Z8125 06/3A-8	69,8	1102	235	1000	73,1
6Z8125 06-8	76,4	1102	235	1000	73,1
6Z8125 07/3A-8	82,5	1254	235	1000	81,7
6Z8125 07-8	89,1	1254	235	1000	81,7
6Z8125 08/3A-8	95,2	1406	235	1000	90,9
6Z8125 08-8	101,8	1406	235	1000	90,9
6Z8125 09-10	114,6	1558	256	1000	100,1
6Z8125 10-10	127,3	1710	256	1000	109,4
6Z8125 11-10	140	1862	256	1000	118,6

6z8125p-2p60-en_b_td

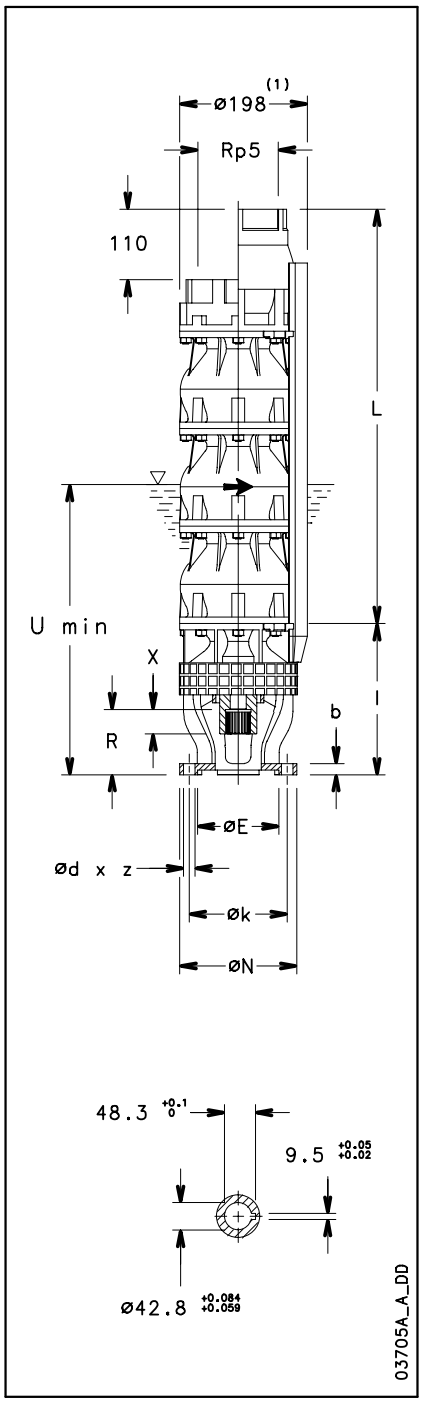

MOTOR CONNECTION

MOTOR	DIMENSIONS (mm)							
	N	k	d	z	b	E H7	R	X
6" (NEMA)	182	111	13,5	4	17	76,16	73	24
8" (NEMA)	182	152,4	18	4	17	127	101,3	40
10"	232	190,5	M16	4	21	127	101,3	84
Coupling 6" and 8" according to NEMA standards								

z8a-mtcn-2p50_a_td

1) Max pump diameter with 1 motor cable included.
2) U min valid only for max. flow speed of 4,2 m/s.
For higher speeds, please contact our sales network.
3) For pumps without non-return valve, reduce dimension L by 110 mm, and reduce weight by 4 Kg.

6Z8 SERIES
PUMP CROSS SECTION AND LIST OF COMPONENTS

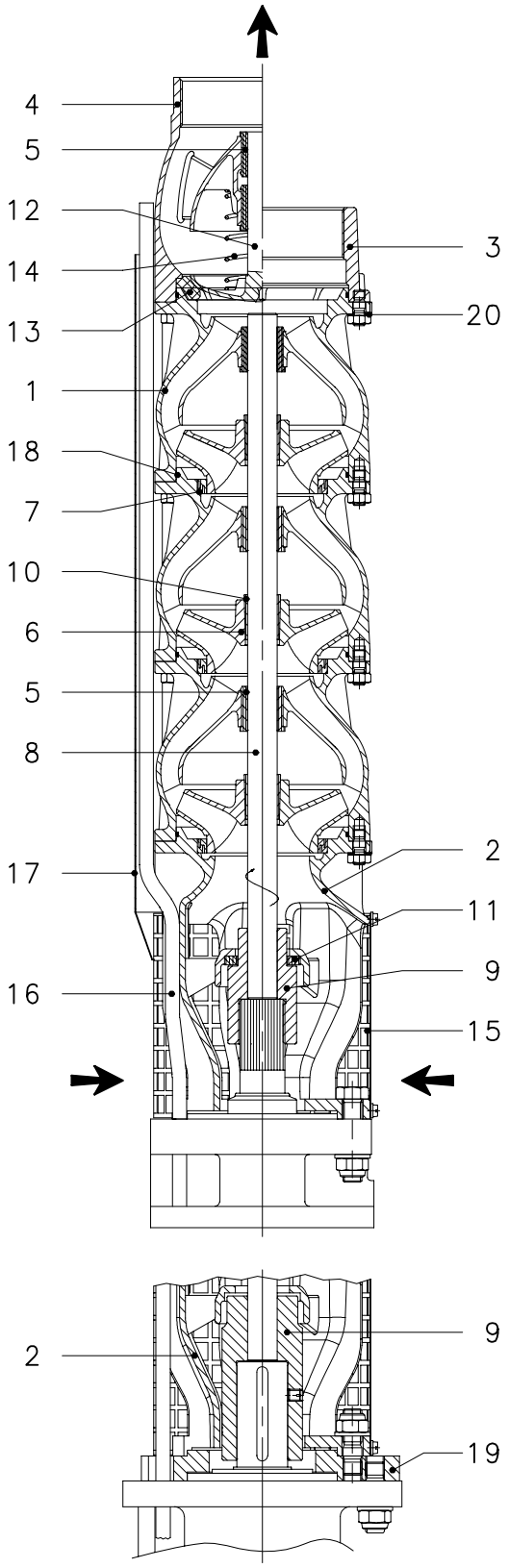

N.RIF.	DESCRIZIONE
1	Stage casing
2	Suction casing
3	Delivery casing
4	Valve body
5	Bush bearing
6	Impeller
7	Wear ring
8	Shaft
9	Coupling
10	Locking sleeve
11	Thrust bearing
12	Non-return valve
13	Valve seat
14	Valve spring
15	Suction strainer
16	Motor cable
17	Cable guard
18	O-ring
19	10" Motor adapter
20	Clamping plate

z8-2p60_b_tp

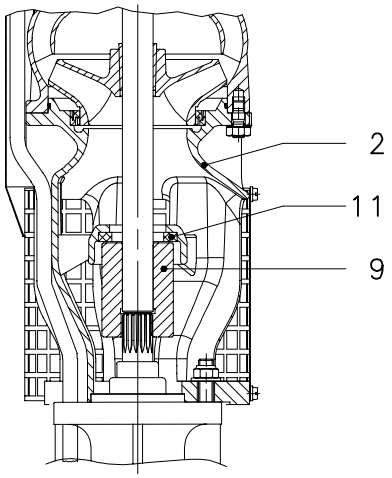

03702_A_DS

6" Submersible motors

Submersible canned motors.
The choice of component materials ensures optimum operating performances, superior quality, reliability and ease of installation.

L6C Series 60 Hz

SPECIFICATIONS

- **Stainless steel** outer sleeve.
- Shaft extension and coupling dimensions to **NEMA** standards.
- Class **F insulation**.
- Protection class: **IP68**.
- Compensating bellows for internal liquid expansion.
- Axial load supported by Kingsbury type thrust bearing.
- **Mechanical seal** protected by sand guard.
- Maximum **immersion depth**: 250 m.
- Maximum **number of starts per hour** at regular intervals: 25 for direct start.
- Maximum supply **voltage variations** allowed: ±10%.
- Maximum water **temperature**: 35°C.
  Max. temperature applies to motors working in an installation capable of delivering a flow of water around the motor jacket of at least 0,2 m/s.
- **Axial thrust**:
  16000 N from 4 to 22 kW;
  27000 N from 30 to 37 kW.
- **Extractable supply cable** fitted with watertight connector.
- **Versions**:
  - Three-phase:
    4 to 22 kW 230 V, 60 Hz.
    4 to 37 kW 380 V, 60 Hz.
    4 to 37 kW 460 V, 60 Hz.
- Motors with double cable outlet for star/delta start can be supplied upon request.
- Can also operate in horizontal position, provided that the associated pump can apply an axial thrust of at least 250 N on the entire operating field.
- Screws included.

OPTIONAL FEATURES

- Silicon Carbide mechanical seal.
- Special voltages.
- Inverter applications.
- Temperature sensor **PT 100 / PTC**.

❑ **High starting torque**

❑ **Power supply cable with extractable connector**

L6C MOTOR SERIES
MOTOR CROSS SECTION AND TABLE OF MATERIALS

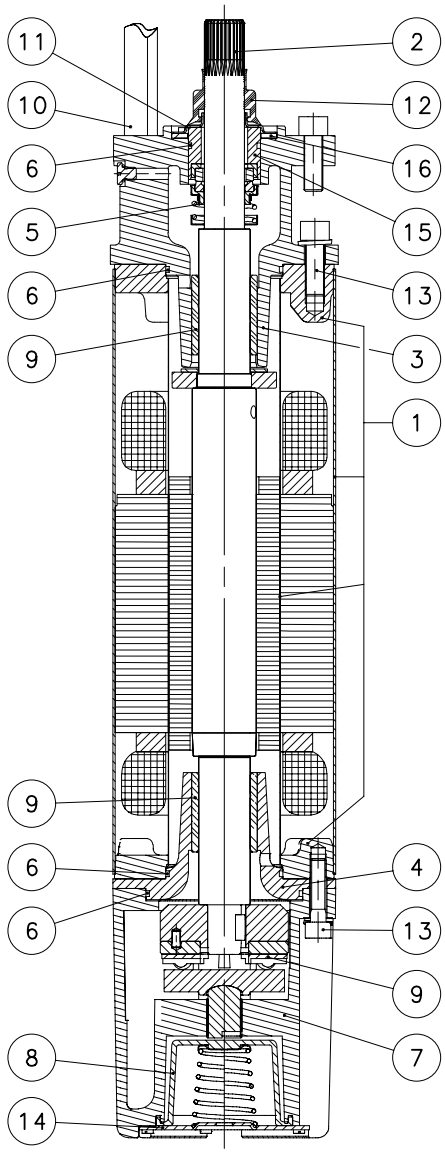

REF. N°	PART	MATERIAL	DESIGNATION	
			EUROPE	USA
1	Inner and outer sleeve	Stainless steel	EN 10088-1-X2CrNi18-9 (1.4307)	AISI304L
	Flange	Carbon steel	EN 10025 - S355JR (Fe 510-B)	ASTM A105
2	Shaft extension	Stainless steel (Duplex)	EN 10095 X3CrNiMoN27-5-2 (1.4460)	AISI329
3	Upper bracket	Cast iron	EN-GJL-200	Class 25 B
4	Intermediate bracket	Cast iron	EN-GJL-200	Class 25 B
5	Mechanical seal	Carbon graphite / Aluminium oxide		
6	Elastomers	NBR		
7	Lower bracket	Cast iron	EN-GJL-200	Class 25 B
8	Compensating bellows	NBR		
9	Bearings	Carbon-graphite		
10	Cable	EPDM		
11	Fixed sand guard	Stainless steel	EN 10088-1-X5CrNi18-10 (1.4301)	AISI304
12	Removable sand guard	NBR		
13	Bolts and screws	Stainless steel	EN 10088-1-X5CrNi18-10 (1.4301)	AISI304
14	Lower cover	Stainless steel	EN 10088-1-X5CrNi18-10 (1.4301)	AISI304
15	Mechanical seal spacer	A105 nichel plated		
16	Sand guard gasket	CR neoprene		
	Cooling liquid	Demineralized water + antifreeze		

L6C MOTOR SERIES IDENTIFICATION CODE

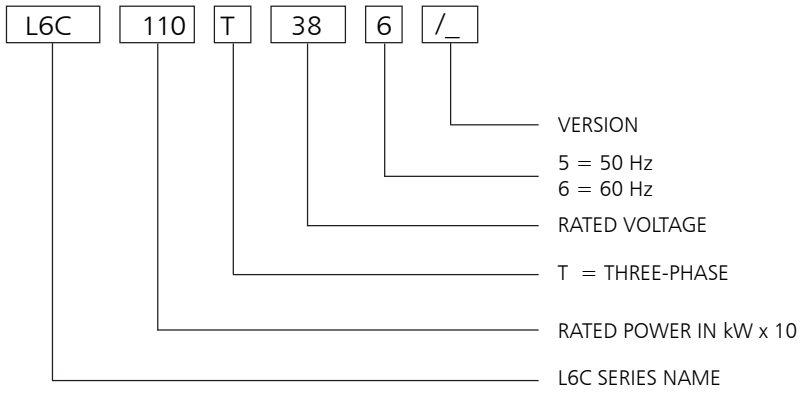

EXAMPLE : L6C110T386

L6C MOTOR :
RATED POWER 11 kW; THREE-PHASE;
RATED VOLTAGE 380 V; 60 Hz.

RATING PLATE

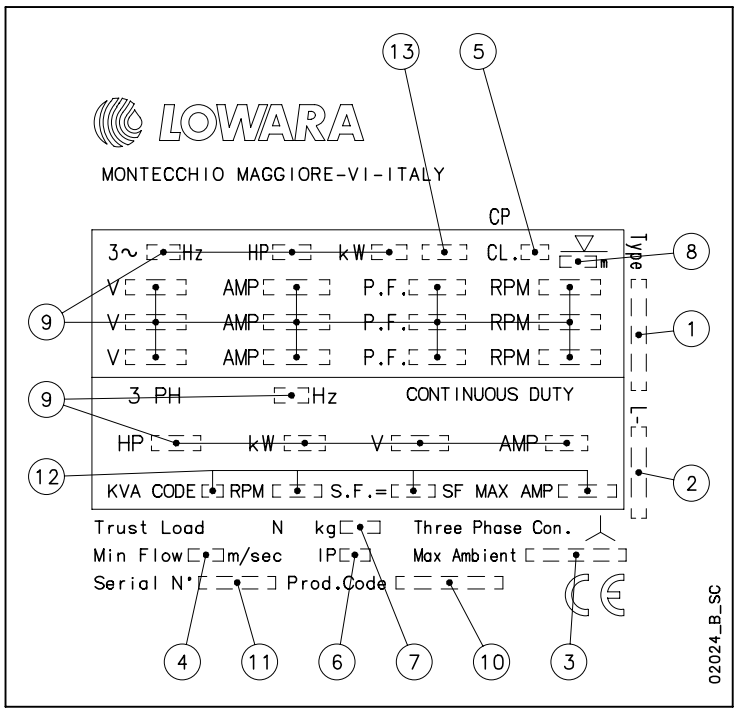

LEGEND

1 - Motor type
2 - Code
3 - Maximum water temperature
4 - Minimum water velocity
5 - Insulation class
6 - Protection class
7 - Weight
8 - Maximum immersion depht
9 - Operating characteristics
10 - Production date
11 - Serial number
12 - Characteristics at service factor
13 - Service type

L6C MOTOR SERIES
DIMENSIONS AND WEIGHTS AT 60 Hz

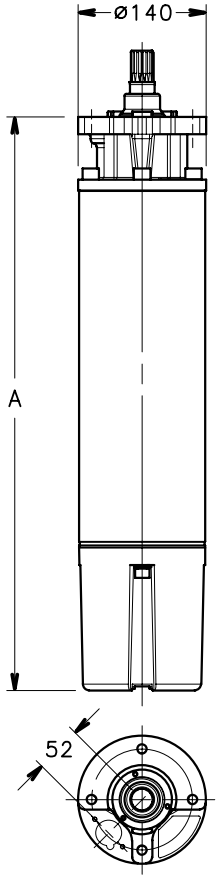

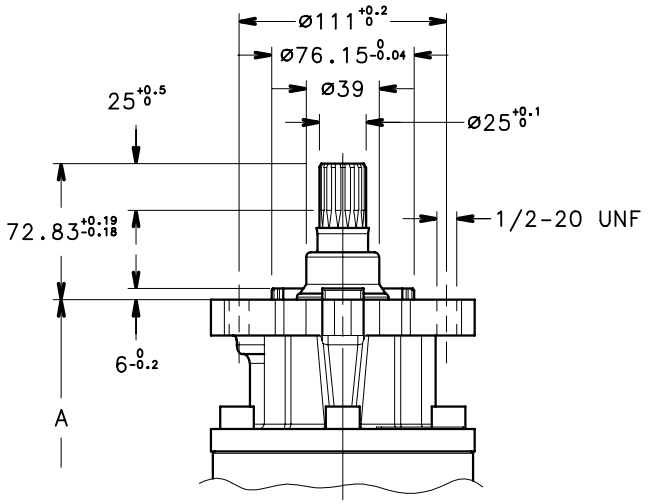

MOTOR TYPE	RATED POWER kW	RATED POWER HP	DIMENSIONS mm A	WEIGHT kg
L6C40T236-386-405	4	5,5	600	39,4
L6C55T236-386-405	5,5	7,5	631	43,2
L6C75T236-386-405	7,5	10	660	45,2
L6C93T236-386-405	9,3	12,5	685	48,8
L6C110T236-386-405	11	15	730	52,8
L6C150T236-386-405	15	20	785	59
L6C185T236-386-405	18,5	25	860	66,4
L6C220T236-386-405	22	30	920	72,4
L6C300T386-405	30	40	1050	85
L6C370T386-405	37	50	1180	98

l6c-2p60-en_c_td

02027_B_DD

L6C MOTOR SERIES
THREE-PHASE OPERATING CHARACTERISTICS AT 60 Hz

MOTOR TYPE	RATED POWER		SERVICE FACTOR	RATED VOLTAGE	OPERATING CHARACTERISTICS AT FULL (S.F.) POWER				DIRECT STARTING		MAX WATER TEMPERATURE	CABLE TYPE	
THREE-PHASE	kW	HP	S. F.	V	A	rpm	η %	cosφ	Ts/Tn*	Is/In	°C	Nc x sec mm²	L m
L6C40T236	4	5,5	1,15	230	19,0	3470	79,0	0,80	1,7	5,45	35	4x4	4
L6C40T386				380	11,5	3470	79,0	0,80	1,7	5,50		4x4	
L6C40T405				460	9,5	3470	79,0	0,80	1,7	5,54		4x4	
L6C55T236	5,5	7,5	1,15	230	26,6	3450	77,0	0,80	1,8	5,00	35	4x4	4
L6C55T386				380	16,1	3450	77,0	0,80	1,8	5,00		4x4	
L6C55T405				460	13,1	3450	77,0	0,80	1,8	5,00		4x4	
L6C75T236	7,5	10	1,15	230	33,0	3440	80,0	0,81	2,0	5,45	35	4x4	4
L6C75T386				380	20,0	3440	80,0	0,81	2,0	5,50		4x4	
L6C75T405				460	16,5	3440	80,0	0,81	2,0	5,50		4x4	
L6C93T236	9,3	12,5	1,15	230	41,2	3450	82,0	0,80	2,1	4,80	35	4x6	4
L6C93T386				380	25,0	3450	82,0	0,80	2,1	4,80		4x4	
L6C93T405				460	20,6	3450	82,0	0,80	2,1	4,80		4x4	
L6C110T236	11	15	1,15	230	46,6	3465	85,0	0,82	2,2	5,20	35	4x6	4
L6C110T386				380	28,2	3465	85,0	0,82	2,2	5,20		4x4	
L6C110T405				460	23,3	3465	85,0	0,82	2,2	5,20		4x4	
L6C150T236	15	20	1,15	230	61,6	3440	85,0	0,83	2,4	5,45	35	4x6	4
L6C150T386				380	37,3	3440	85,0	0,83	2,4	5,45		4x4	
L6C150T405				460	30,8	3440	85,0	0,83	2,4	5,45		4x4	
L6C185T236	18,5	25	1,15	230	80,0	3440	86,0	0,80	2,5	5,70	35	4x8	4
L6C185T386				380	48,4	3440	86,0	0,80	2,5	5,70		4x6	
L6C185T405				460	40	3440	86,0	0,80	2,5	5,70		4x6	
L6C220T236	22	30	1,15	230	99,6	3440	86,0	0,77	2,6	5,80	35	4x8	4
L6C220T386				380	60,2	3440	86,0	0,77	2,6	5,80		4x6	
L6C220T405				460	49,8	3440	86,0	0,77	2,6	5,80		4x6	
L6C300T386	30	40	1,15	380	75,0	3440	85,0	0,82	2,6	6,20	35	4x8	4
L6C300T405				460	62,0	3440	85,0	0,82	2,6	6,20		4x6	
L6C370T386	37	50	1,15	380	90,0	3440	84,0	0,88	2,6	6,20	35	4x8	4
L6C370T405				460	77,0	3440	84,0	0,88	2,6	6,20		4x8	

* Ts/Tn = ratio between starting torque and nominal torque.

l6c-2p60-en_e_te

6" Submersible motors

L6W Series 60 Hz

❑ **Rewindable stator**

❑ **Thrust bearing Kingsbury type**

❑ **Mechanical seal**

Water filled submersible motors.
The robust design together with excellent choise of materials ensures optimal performance, ease of installation and reliability in all applications. For extremely demanding operation as high water temperature or aggressive environments special versions are available.

SPECIFICATIONS

- **Stainless steel** outer sleeve.
- Shaft extension and coupling dimensions to **NEMA** standards.
- **Rewindable stator**.
- Class **Y insulation**.
- Protection class: **IP68**.
- Compensating bellows for internal liquid expansion.
- Axial load supported by Kingsbury type thrust bearing.
- **Mechanical seal** protected by sand guard.
- Maximum **immersion depth**: 350 m.
- Maximum **number of starts per hour** at regular intervals: 15.
- Maximum supply **voltage variations** allowed : ±10%.
- Maximum water **temperature**: 30°C.
  Max. temperature applies to motors working in a installation capable of delivering a flow of water around the motor jacket as following:
  Standard versions 0,2 m/s (4÷9,3 kW), 0,3 m/s (11÷30 kW) and 0,5 m/s (37 kW).
  HT versions 0,2 m/s (5,5÷7,5 kW), 0,3 m/s (9,3÷26 kW) and 0,5 m/s (30 kW).
- **Axial thrust**:
  16000 N from 4 to 22 kW;
  30000 N from 26 to 37 kW.
- **Power supply** cable suitable for drinkable water.
- **Versions**:
  - Three-phase:
    4 to 18,5 kW, DOL 230 V, 60 Hz.
    4 to 30 kW, Y/D 230 V, 60 Hz.
    4 to 37 kW 380 V, 60 Hz.
    4 to 37 kW 460 V, 60 Hz.
- **Horizontal operation**:
  valid for all versions provided that the direction of the axial thrust generated by the impellers is always from the pump to the motor.
- Flat power supply cable.
- Screws included.

SPECIAL VERSIONS

- Motors with double cable outlet for star/delta start.
- **L6WN series**: complete range available realized of AISI 316 stainless steel.
- **L6WR series**: complete range available realized of Duplex stainless steel.
- **HT series**: complete range available for all the L6W/N/R construction, realized for applications in high temperature environments (**up to 60°C**) or under inverter.

OPTIONAL FEATURES

- Silicon Carbide mechanical seal.
- Special voltages.

ACCESSORIES

- Temperature sensor **PT 100 / PTC**.

L6W - L6WN - L6WR MOTOR SERIES
MOTOR CROSS SECTION

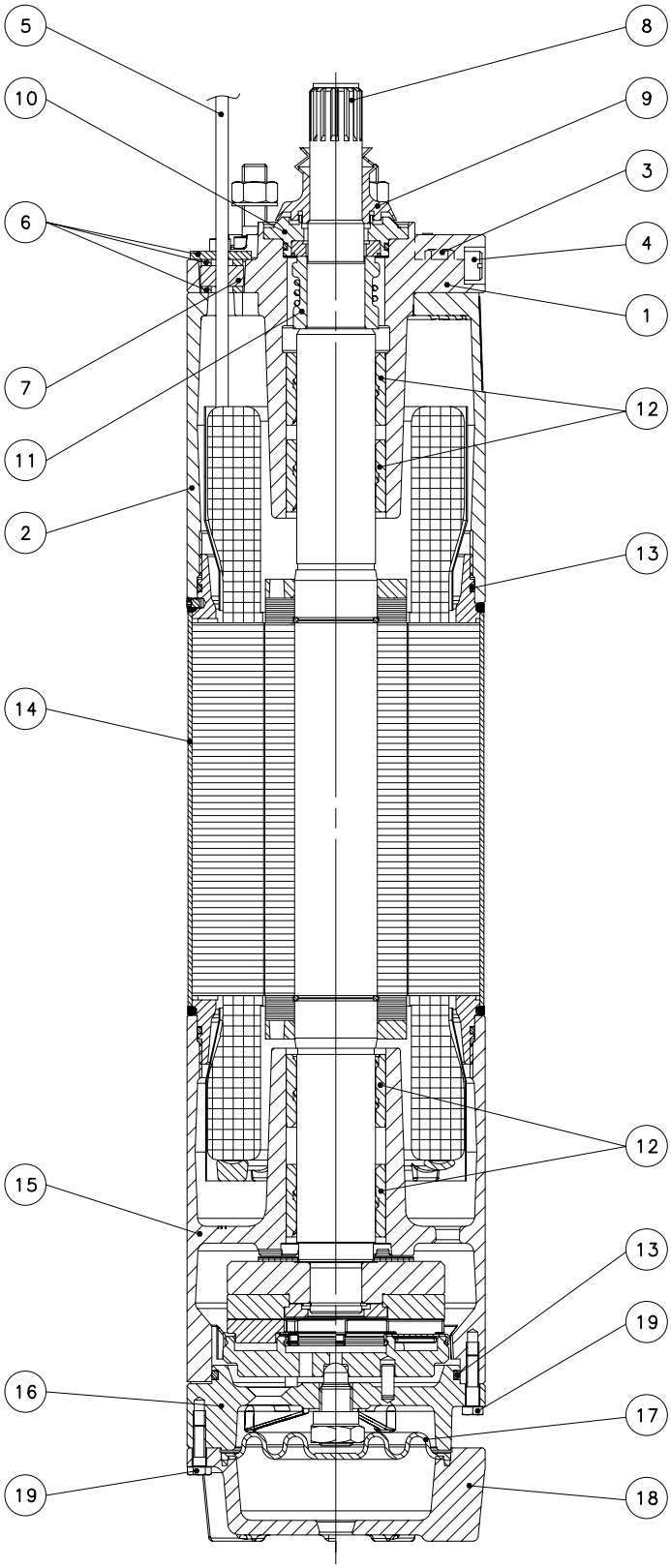

L6W TABLE OF MATERIALS

REF. N°	PART	MATERIAL	DESIGNATION EUROPE	USA
1	Upper bracket	Cast iron	EN-GJL-200	Class 25 B
2	Spacer	Cast iron	EN-GJL-200	Class 25 B
3	Filling plug + OR	Stainless steel+NBR	EN 10088-1-X5CrNiMo17-12-2 (1.4401)	AISI 316
4	Vent valve	Stainless steel	EN 10088-1-X5CrNiMo17-12-2 (1.4401)	AISI 316
5	Cable	EPR		
6	Cable gland plate	Stainless steel	EN 10088-1-X5CrNi18-10 (1.4301)	AISI304
7	Cable gland	EPDM		
8	Shaft end	Stainless steel	EN 10088-1-X20Cr13 (1.4021)	AISI420
9	Removable sand guard	EPDM		
10	Mechanical seal cover	Stainless steel	EN 10213-4-GX5CrNi19-10 (1.4308)	ASTM CF-8 (AISI 304 cast)
11	Mechanical seal	Carbon graphite / Aluminium oxide		
12	Bush bearings	Carbon graphite		
13	Elastomers	NBR		
14	Motor sleeve	Stainless steel	EN 10088-1-X2CrNi19-11 (1.4306)	AISI304L
15	Lower bracket	Cast iron	EN-GJL-200	Class 25 B
16	Thrust bearing bracket	Cast iron	EN-GJL-200	Class 25 B
17	Diaphragm	EPDM		
18	Lower cover	Cast iron	EN-GJL-200	Class 25 B
19	Bolts and screws	Stainless steel	EN 10088-1-X5CrNi18-10 (1.4301)	AISI304
	Cooling liquid	Water + antifreeze		

L6w-2p50-en_b_tm

L6WN TABLE OF MATERIALS

REF. N°	PART	MATERIAL	DESIGNATION EUROPE	USA
1	Upper bracket	Stainless steel	EN 10213-4-GX5CrNiMo19-11-2 (1.4408)	ASTM CF-8M (AISI 316 cast)
2	Spacer	Stainless steel	EN 10213-4-GX5CrNiMo19-11-2 (1.4408)	ASTM CF-8M (AISI 316 cast)
3	Filling plug + OR	Stainless steel+NBR	EN 10088-1-X5CrNiMo17-12-2 (1.4401)	AISI 316
4	Vent valve	Stainless steel	EN 10088-1-X5CrNiMo17-12-2 (1.4401)	AISI 316
5	Cable	EPR		
6	Cable gland plate	Stainless steel	EN 10088-1-X5CrNiMo17-12-2 (1.4401)	AISI 316
7	Cable seal	EPDM		
8	Shaft end	Duplex stainless steel	EN 10088-1-X2CrNiMoN22-5-3 (1.4462)	A276/A790-S31803
9	Removable sand guard	EPDM		
10	Mechanical seal cover	Stainless steel	EN 10213-4-GX5CrNiMo19-11-2 (1.4408)	ASTM CF-8M (AISI 316 cast)
11	Mechanical seal	Carbon graphite / Aluminium oxide		
12	Bush bearings	Carbon graphite		
13	Elastomers	NBR		
14	Motor sleeve	Stainless steel	EN 10088-1-X2CrNiMo17-12-2 (1.4404)	AISI 316L
15	Lower bracket	Stainless steel	EN 10213-4-GX5CrNiMo19-11-2 (1.4408)	ASTM CF-8M (AISI 316 cast)
16	Thrust bearing bracket	Stainless steel	EN 10213-4-GX5CrNiMo19-11-2 (1.4408)	ASTM CF-8M (AISI 316 cast)
17	Diaphragm	EPDM		
18	Lower cover	Stainless steel	EN 10213-4-GX5CrNiMo19-11-2 (1.4408)	ASTM CF-8M (AISI 316 cast)
19	Bolts and screws	Stainless steel	EN 10088-1-X5CrNiMo17-12-2 (1.4401)	AISI 316
	Cooling liquid	Water + antifreeze		

L6wn-2p50-en_b_tm

L6WR TABLE OF MATERIALS

REF. N°	PART	MATERIALE	DESIGNATION EUROPE	USA
1	Upper bracket	Duplex stainless steel	EN 10213-4-GX2CrNiMoCuN25-6-3-3 (1.4517)	
2	Spacer	Duplex stainless steel	EN 10213-4-GX2CrNiMoCuN25-6-3-3 (1.4517)	
3	Filling plug + OR	Duplex s. s.+NBR	EN 10088-1-X2CrNiMoN22-5-3 (1.4462)	A276/A790-S31803
4	Vent valve	Duplex stainless steel	EN 10088-1-X2CrNiMoN22-5-3 (1.4462)	A276/A790-S31803
5	Cable	EPR		
6	Cable gland plate	Stainless steel	EN 10088-1X1NiCrMoCu25-20-5 (1.4539)	AISI 904L
7	Cable gland	EPDM		
8	Shaft end	Duplex stainless steel	EN 10088-1-X2CrNiMoN22-5-3 (1.4462)	A276/A790-S31803
9	Removable sand guard	EPDM		
10	Mechanical seal cover	Duplex stainless steel	EN 10088-1-X2CrNiMoN22-5-3 (1.4462)	A276/A790-S31803
11	Mechanical seal	Carbon graphite / Aluminium oxide		
12	Bush bearings	Carbon graphite		
13	Elastomers	NBR		
14	Motor sleeve	Stainless steel	EN 10088-1X1NiCrMoCu25-20-5 (1.4539)	AISI 904L
15	Lower bracket	Duplex stainless steel	EN 10213-4-GX2CrNiMoCuN25-6-3-3 (1.4517)	
16	Thrust bearing bracket	Duplex stainless steel	EN 10213-4-GX2CrNiMoCuN25-6-3-3 (1.4517)	
17	Diaphragm	EPDM		
18	Lower cover	Duplex stainless steel	EN 10213-4-GX2CrNiMoCuN25-6-3-3 (1.4517)	
19	Bolts and screws	Duplex stainless steel	EN 10088-1-X2CrNiMoN22-5-3 (1.4462)	A276/A790-S31803
	Cooling liquid	Water + antifreeze		

L6wr-2p50-en_b_tm

L6W MOTOR SERIES IDENTIFICATION CODE

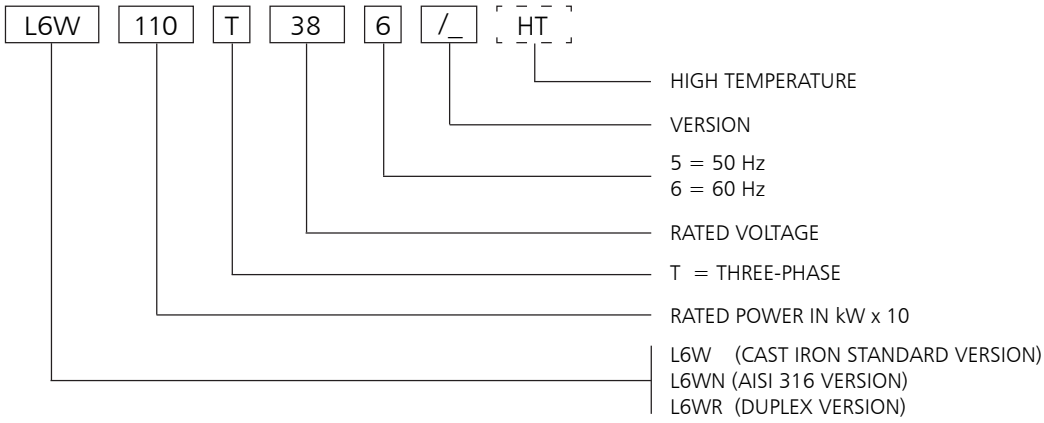

EXAMPLE : L6W110T386/A HT

L6W MOTOR :
RATED POWER 11 kW; THREE-PHASE;
RATED VOLTAGE 380 V; 60 Hz; /A VERSION; HIGH TEMPERATURE

RATING PLATE

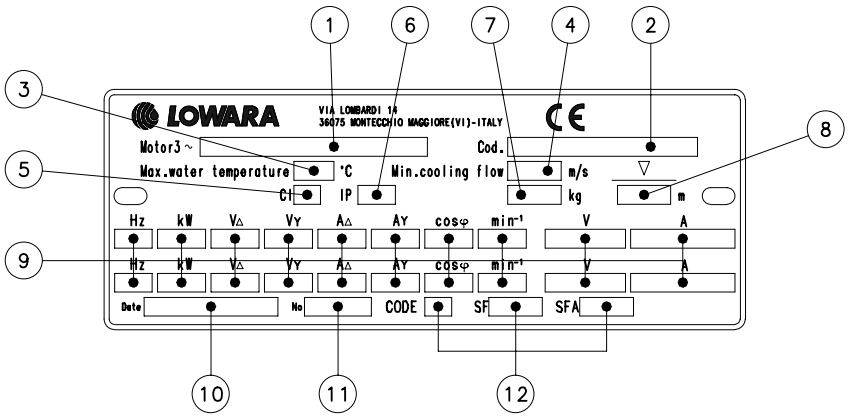

03557_A_SC

LEGEND

1 - Motor type
2 - Code
3 - Maximum water temperature
4 - Minimum water velocity
5 - Insulation class
6 - Protection class
7 - Weight
8 - Maximum immersion depht
9 - Operating characteristics
10 - Production date
11 - Serial number
12 - Characteristics at service factor

L6W MOTOR SERIES
DIMENSIONS AND WEIGHTS AT 60 Hz

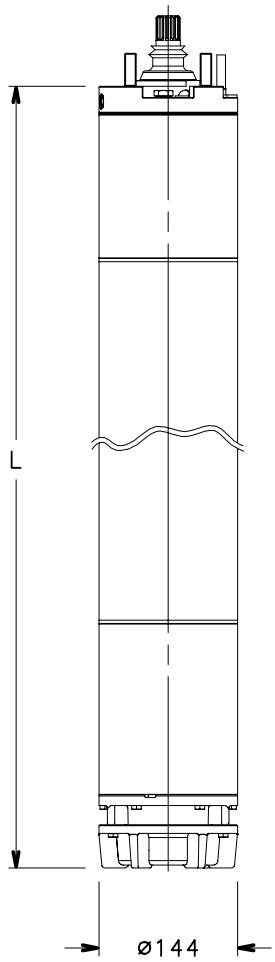

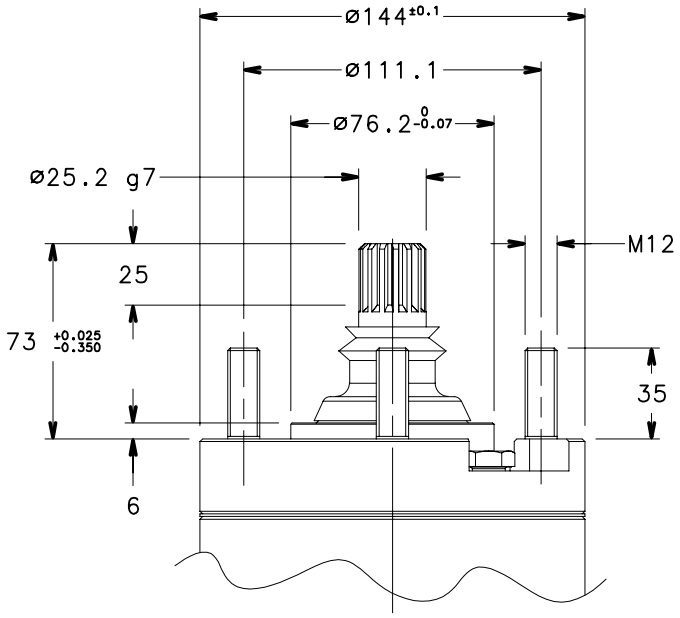

MOTOR TYPE	RATED POWER		DIMENSIONS (mm)	WEIGHT
	kW	HP	L	kg
L6W40T236-386-405	4	5,5	583	38
L6W55T236-386-405	5,5	7,5	613	42
L6W75T236-386-405	7,5	10	653	46
L6W93T236-386-405	9,3	12,5	683	50
L6W110T236-386-405	11	15	723	54
L6W130T236-386-405	13	17,5	763	58
L6W150T236-386-405	15	20	833	66
L6W185T236-386-405	18,5	25	903	74
L6W220T236-386-405	22	30	943	77
L6W260T236-386-405	26	35	1071	86
L6W300T236-386-405	30	40	1151	94
L6W370T236-386-405	37	50	1301	108

l6w-2p60_a_td

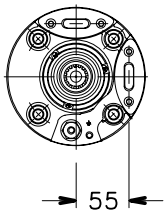

MOTOR TYPE	RATED POWER		DIMENSIONS (mm)	WEIGHT
	kW	HP	L	kg
L6W40T236-386-405 HT	4	5,5	613	42
L6W55T236-386-405 HT	5,5	7,5	653	46
L6W75T236-386-405 HT	7,5	10	683	50
L6W93T236-386-405 HT	9,3	12,5	723	54
L6W110T236-386-405 HT	11	15	763	58
L6W130T236-386-405 HT	13	17,5	833	66
L6W150T236-386-405 HT	15	20	903	74
L6W185T236-386-405 HT	18,5	25	943	77
L6W220T236-386-405 HT	22	30	1071	86
L6W260T236-386-405 HT	26	35	1151	94
L6W300T236-386-405 HT	30	40	1301	108

l6w-ht-2p60_a_td

03570_D_DD

L6W MOTOR SERIES
THREE-PHASE OPERATING CHARACTERISTICS AT 60 Hz

MOTOR TYPE THREE-PHASE	RATED POWER		RATED VOLTAGE	OPERATING CHARACTERISTICS AT RATED POWER				DIRECT ON-LINE STARTING			SERVICE FACTOR	SERVICE FACTOR AMPS	MAX WATER TEMP.	CABLE TYPE Sec. (mm^2)		
	kW	HP	V	A	rpm	η %	cosφ	Is/In	Ts/Tn	Tmax/Tn	SF	SFA	°C	DOL	Y/D	L (m)
L6W40T236	4	5,5	230	17,3	3500	72,8	0,80	4,51	1,28	2,01	1,15	19,0	30	4	4	4
L6W40T386			380	9,94	3490	73,0	0,84	4,75	1,29	2,02		11,2				
L6W40T405			460	8,09	3485	73,0	0,85	4,82	1,29	2,02		9,16				
L6W55T236	5,5	7,5	230	24,3	3505	75,4	0,75	5,01	1,59	2,54	1,15	26,4	30	4	4	4
L6W55T386			380	13,7	3495	76,3	0,80	5,38	1,60	2,55		15,1				
L6W55T405			460	10,9	3490	76,8	0,82	5,59	1,60	2,55		12,2				
L6W75T236	7,5	10	230	30,6	3500	78,2	0,79	5,33	1,69	2,49	1,15	33,6	30	4	4	4
L6W75T386			380	17,4	3490	78,8	0,83	5,67	1,70	2,50		19,4				
L6W75T405			460	14,1	3485	78,9	0,84	5,78	1,70	2,50		15,8				
L6W93T236	9,3	12,5	230	37,6	3495	79,4	0,78	5,52	1,84	2,69	1,15	41,3	30	4	4	4
L6W93T386			380	21,3	3485	79,9	0,83	5,90	1,85	2,70		23,8				
L6W93T405			460	17,3	3480	80,0	0,84	6,00	1,85	2,70		19,5				
L6W110T236	11	15	230	43,5	3490	80,3	0,79	5,38	1,52	2,56	1,15	47,9	30	6	4	4
L6W110T386			380	24,7	3480	80,7	0,84	5,73	1,53	2,57		27,8		4		
L6W110T405			460	20,2	3475	80,8	0,85	5,79	1,53	2,57		22,8				
L6W130T236	13	17,5	230	52,5	3495	80,5	0,77	5,33	1,66	2,55	1,15	57,4	30	6	4	4
L6W130T386			380	29,5	3485	81,2	0,82	5,74	1,67	2,55		32,9		4		
L6W130T405			460	23,3	3475	81,4	0,86	6,00	1,67	2,56		26,4				
L6W150T236	15	20	230	56,4	3485	83,1	0,80	6,21	1,93	3,02	1,15	62,5	30	10	4	4
L6W150T386			380	32,5	3470	83,3	0,84	6,52	1,94	3,03		36,6		4		
L6W150T405			460	27,2	3475	83,3	0,83	6,44	1,94	3,03		30,5				
L6W185T236	18,5	25	230	71,1	3495	83,4	0,78	6,24	2,39	3,10	1,15	78,2	30	10	6	4
L6W185T386			380	40,4	3485	83,8	0,83	6,65	2,40	3,11		45,1		4	4	
L6W185T405			460	32,6	3480	83,9	0,85	6,81	2,40	3,11		36,7		6		
L6W220T236	22	30	230	82,5	3510	84,8	0,79	5,70	0,98	2,95	1,15	91,9	30	-	6	4
L6W220T386			380	47,5	3500	84,7	0,83	5,99	0,98	2,96		53,8		6	4	
L6W220T405			460	40,0	3500	84,7	0,82	5,88	0,98	2,96		45,0				
L6W260T236	26	35	230	107	3510	84,4	0,72	5,45	1,17	2,81	1,15	117	30	-	10	4
L6W260T386			380	59,8	3500	85,0	0,78	5,90	1,18	2,82		66,5		6	4	
L6W260T405			460	47,8	3495	85,0	0,80	6,10	1,18	2,82		53,7				
L6W300T236	30	40	230	112	3510	84,4	0,79	6,04	2,49	2,75	1,15	126	30	-	10	4
L6W300T386			380	64,9	3500	84,4	0,83	6,31	2,49	2,75		72,6		10	4	
L6W300T405			460	53,9	3505	84,5	0,83	6,28	2,49	2,75		61,0				
L6W370T386	37	50	380	86,2	3495	83,4	0,78	5,40	1,32	2,63	1,15	95,9	30	10	6	4
L6W370T405			460	68,6	3490	83,6	0,81	5,61	1,32	2,63		77,1			4	

Ts/Tn = ratio between starting torque and nominal torque.

Tmax/Tn = ratio between maximum torque and nominal torque.

l6w-2p60_d_te

L6W HT MOTOR SERIES
THREE-PHASE OPERATING CHARACTERISTICS AT 60 Hz

MOTOR TYPE THREE-PHASE	RATED POWER		RATED VOLTAGE	OPERATING CHARACTERISTICS AT RATED POWER				DIRECT ON-LINE STARTING			SERVICE FACTOR	SERVICE FACTOR AMPS	MAX WATER TEMP.	CABLE TYPE Sec. (mm^2)		
	kW	HP	V	A	rpm	η %	cosφ	Is/In	Ts/Tn	Tmax/Tn	SF	SFA	°C	DOL	Y/D	L (m)
L6W40T236 HT	4	5,5	230	21,3	3530	72,3	0,65	5,74	2,21	3,52	1,15	22,4	45	4	4	4
L6W40T386 HT			380	11,5	3525	74,0	0,71	6,43	2,21	3,52		12,3				
L6W40T405 HT			460	9,04	3520	74,9	0,74	6,76	2,21	3,53		9,74				
L6W55T236 HT	5,5	7,5	230	26,2	3525	76,1	0,69	6,23	2,34	3,45	1,15	27,9	45	4	4	4
L6W55T386 HT			380	14,4	3520	77,6	0,75	6,86	2,34	3,45		15,5				
L6W55T405 HT			460	11,5	3520	78,0	0,77	7,10	2,34	3,45		12,5				
L6W75T236 HT	7,5	10	230	33,5	3515	78,2	0,72	6,21	2,30	3,36	1,15	36,0	45	4	4	4
L6W75T386 HT			380	18,5	3510	79,4	0,78	6,81	2,31	3,37		20,2				
L6W75T405 HT			460	14,9	3505	79,7	0,79	6,98	2,31	3,37		16,4				
L6W93T236 HT	9,3	12,5	230	39,5	3510	79,8	0,74	5,87	1,81	3,05	1,15	42,7	45	6	4	4
L6W93T386 HT			380	22,0	3500	80,8	0,80	6,38	1,82	3,06		24,2		4		
L6W93T405 HT			460	17,8	3495	81,0	0,81	6,51	1,82	3,06		19,7				
L6W110T236 HT	11	15	230	48,2	3515	79,9	0,72	5,81	1,98	3,04	1,15	51,7	45	6	4	4
L6W110T386 HT			380	26,4	3505	71,1	0,78	6,42	1,99	3,05		28,9		4		
L6W110T405 HT			460	20,5	3500	81,7	0,82	6,83	1,99	3,05		22,8				
L6W130T236 HT	13	17,5	230	56,5	3510	81,9	0,71	6,21	2,24	3,50	1,15	60,7	45	10	4	4
L6W130T386 HT			380	31,3	3500	82,9	0,76	6,78	2,25	3,51		34,1		4		
L6W130T405 HT			460	24,6	3495	83,5	0,80	7,13	2,25	3,52		27,1				
L6W150T236 HT	15	20	230	63,3	3515	82,7	0,72	7,02	2,98	3,86	1,15	68,2	45	10	4	4
L6W150T386 HT			380	35,0	3510	83,5	0,78	7,68	2,99	3,86		38,3		4		
L6W150T405 HT			460	28,0	3505	83,9	0,80	7,93	2,99	3,87		30,9		6		
L6W185T236 HT	18,5	25	230	74,1	3520	84,6	0,74	6,77	1,94	3,25	1,15	81,2	45	-	6	4
L6W185T386 HT			380	41,6	3515	85,2	0,79	7,30	1,94	3,25		46,3		6	4	
L6W185T405 HT			460	35,0	3520	85,0	0,78	7,17	1,94	3,25		38,8		6		
L6W220T236 HT	22	30	230	97,7	3525	84,0	0,67	5,97	1,40	3,35	1,15	105	45	10	10	4
L6W220T386 HT			380	53,5	3520	85,0	0,73	6,59	1,40	3,36		58,6			4	
L6W220T405 HT			460	42,3	3515	85,2	0,77	6,89	1,40	3,36		46,8		6		
L6W260T236 HT	26	35	230	102	3525	84,4	0,76	6,64	2,89	3,19	1,15	112	45	-	10	4
L6W260T386 HT			380	57,7	3515	84,7	0,81	7,10	2,89	3,19		64,8		10	4	
L6W260T405 HT			460	48,0	3520	84,7	0,80	7,05	2,89	3,19		53,7				
L6W300T386 HT	30	40	380	75,2	3520	83,7	0,73	6,19	1,64	3,28	1,15	82,1	45	-	6	4
L6W300T405 HT			460	58,8	3515	84,2	0,76	6,54	1,64	3,28		64,9		10	4	

Ts/Tn = ratio between starting torque and nominal torque.

Tmax/Tn = ratio between maximum torque and nominal torque.

l6w-ht-2p60_b_te

8" Submersible motors

L8W Series 60 Hz

❑ **Rewindable stator**

❑ **Thrust bearing Kingsbury type**

❑ **Mechanical seal**

Water filled submersible motors.
The robust design together with excellent choise of materials ensures optimal performance, ease of installation and reliability in all applications. For extremely demanding operation as high water temperature or aggressive environments special versions are available.

SPECIFICATIONS

- **Stainless steel** outer sleeve.
- Shaft extension and coupling dimensions to **NEMA** standards.
- **Rewindable stator**.
- Class **Y insulation**.
- Protection class: **IP68**.
- Compensating bellows for internal liquid expansion.
- Axial load supported by Kingsbury type thrust bearing.
- **Mechanical seal** protected by sand guard.
- Maximum **immersion depth**: 350 m.
- Maximum **number of starts per hour** at regular intervals: 10.
- Maximum supply **voltage variations** allowed : ±10%.
- Maximum water **temperature**: 30°C.
  Max. temperature applies to motors working in a installation capable of delivering a flow of water around the motor jacket of at least 0,5 m/s.
- **Axial thrust**: 50000 N from 30 to 93 kW.
- **Power supply** cable suitable for drinkable water.
- **Versions**:
  - Three-phase:
    30 to 93 kW 380 V, 60 Hz.
    30 to 93 kW 460 V, 60 Hz.
- **Horizontal operation**: valid for all versions provided that the direction of the axial thrust generated by the impellers is always from the pump to the motor.

SPECIAL VERSIONS

- Motors with double cable outlet for star/delta start.
- **L8WN series**: complete range available realized of AISI 316 stainless steel.
- **L8WR series**: complete range available realized of Duplex stainless steel.
- **HT series**: complete range available for all the L8W/N/R construction, realized for applications in high temperature environments (**up to 60°C**) or under inverter.

OPTIONAL FEATURES

- Silicon Carbide mechanical seal.
- Special voltages.

ACCESSORIES

- Temperature sensor **PT 100 / PTC**.

L8W - L8WN - L8WR MOTOR SERIES
MOTOR CROSS SECTION

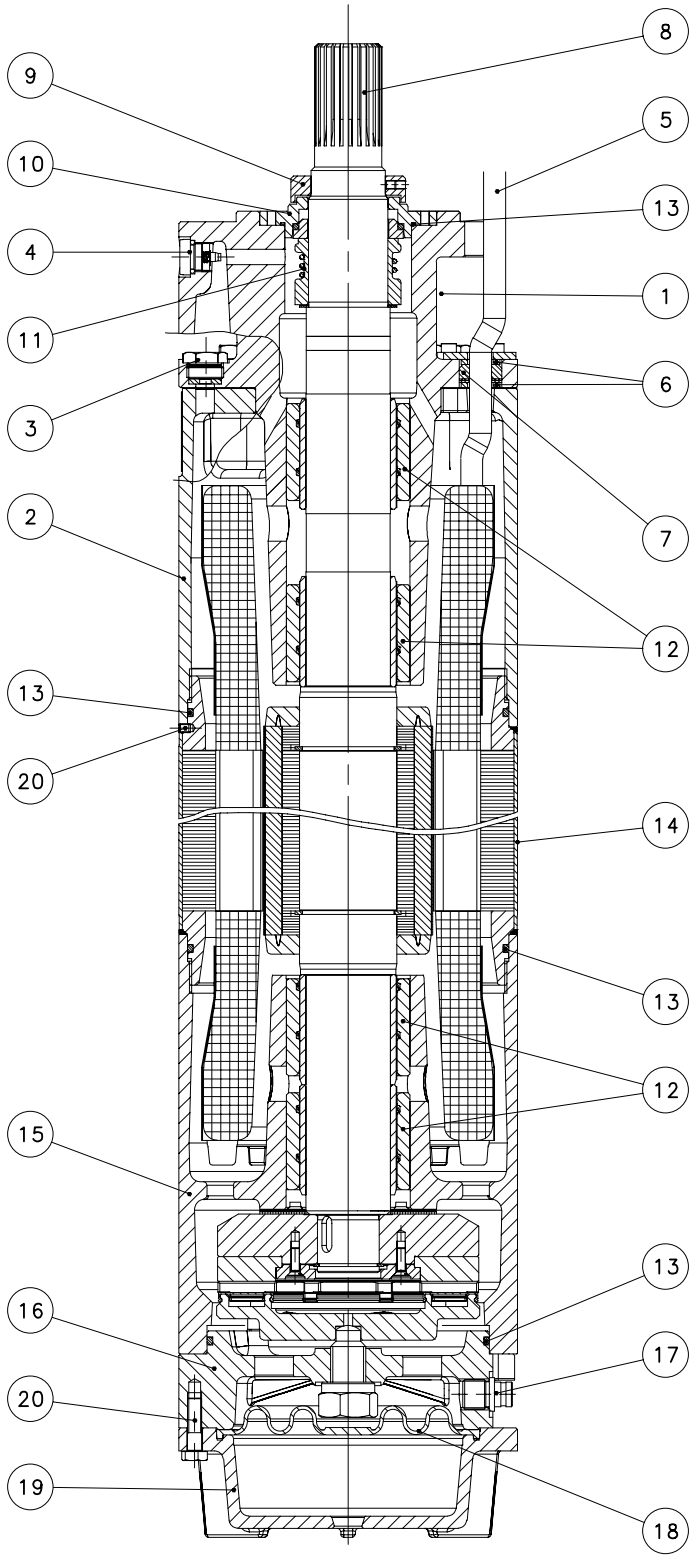

L8W TABLE OF MATERIALS

REF. N°	PART	MATERIAL	DESIGNATION EUROPE	USA
1	Upper bracket	Cast iron	EN-GJL-200	Class 25 B
2	Spacer	Cast iron	EN-GJL-200	Class 25 B
3	Filling plug + OR	Stainless steel+NBR	EN 10088-1-X5CrNiMo17-12-2 (1.4401)	AISI 316
4	Vent valve	Stainless steel	EN 10088-1-X5CrNiMo17-12-2 (1.4401)	AISI 316
5	Cable	EPR		
6	Cable gland plate	Stainless steel	EN 10088-1-X5CrNi18-10 (1.4301)	AISI304
7	Cable gland	EPDM		
8	Shaft end	Duplex stainless steel	EN 10088-1-X2CrNiMoN22-5-3 (1.4462)	A276/A790-S31803
9	Removable sand guard	Stainless steel	EN 10088-1-X2CrNiMo17-12-2 (1.4404)	AISI 316L
10	Mechanical seal cover	Stainless steel	EN 10088-1-X2CrNiMo17-12-2 (1.4404)	AISI 316L
11	Mechanical seal	Carbon graphite / Aluminium oxide		
12	Bush bearings	Carbon graphite		
13	Elastomers	NBR		
14	Motor sleeve	Stainless steel	EN 10088-1-X2CrNi19-11 (1.4306)	AISI304L
15	Lower bracket	Cast iron	EN-GJL-200	Class 25 B
16	Thrust bearing bracket	Cast iron	EN-GJL-200	Class 25 B
17	Filling valve	Stainless steel	EN 10088-1-X5CrNiMo17-12-2 (1.4401)	AISI 316
18	Diaphragm	EPDM		
19	Lower cover	Cast iron	EN-GJL-200	Class 25 B
20	Bolts and screws	Stainless steel	EN 10088-1-X5CrNi18-10 (1.4301)	AISI304
	Cooling liquid	Water + antifreeze		

L8w-2p50-en_a_tm

L8WN TABLE OF MATERIALS

REF. N°	PART	MATERIAL	DESIGNATION EUROPE	USA
1	Upper bracket	Stainless steel	EN 10213-4 - GX5CrNiMo19-11-2 (1.4408)	ASTM CF-8M (AISI 316 cast)
2	Spacer	Stainless steel	EN 10213-4 - GX5CrNiMo19-11-2 (1.4408)	ASTM CF-8M (AISI 316 cast)
3	Filling plug + OR	Stainless steel+NBR	EN 10088-1-X5CrNiMo17-12-2 (1.4401)	AISI 316
4	Vent valve	Stainless steel	EN 10088-1-X5CrNiMo17-12-2 (1.4401)	AISI 316
5	Cable	EPR		
6	Cable gland plate	Stainless steel	EN 10088-1-X5CrNiMo17-12-2 (1.4401)	AISI 316
7	Cable gland	EPDM		
8	Shaft end	Duplex stainless steel	EN 10088-1-X2CrNiMoN22-5-3 (1.4462)	A276/A790-S31803
9	Removable sand guard	Stainless steel	EN 10088-1-X2CrNiMo17-12-2 (1.4404)	AISI 316L
10	Mechanical seal cover	Stainless steel	EN 10088-1-X2CrNiMo17-12-2 (1.4404)	AISI 316L
11	Mechanical seal	Carbon graphite / Aluminium oxide		
12	Bush bearings	Carbon graphite		
13	Elastomers	NBR		
14	Motor sleeve	Stainless steel	EN 10088-1-X2CrNiMo17-12-2 (1.4404)	AISI 316L
15	Lower bracket	Stainless steel	EN 10213-4 - GX5CrNiMo19-11-2 (1.4408)	ASTM CF-8M (AISI 316 cast)
16	Thrust bearing bracket	Stainless steel	EN 10213-4 - GX5CrNiMo19-11-2 (1.4408)	ASTM CF-8M (AISI 316 cast)
17	Filling valve	Stainless steel	EN 10088-1-X5CrNiMo17-12-2 (1.4401)	AISI 316
18	Diaphragm	EPDM		
19	Lower cover	Stainless steel	EN 10213-4 - GX5CrNiMo19-11-2 (1.4408)	ASTM CF-8M (AISI 316 cast)
20	Bolts and screws	Stainless steel	EN 10088-1-X5CrNiMo17-12-2 (1.4401)	AISI 316
	Cooling liquid	Water + antifreeze		

L8wn-2p50-en_a_tm

L8WR TABLE OF MATERIALS

REF. N°	PART	MATERIAL	DESIGNATION EUROPE	USA
1	Upper bracket	Duplex stainless steel	EN 10213-4-GX2CrNiMoCuN25-6-3-3 (1.4517)	
2	Spacer	Duplex stainless steel	EN 10213-4-GX2CrNiMoCuN25-6-3-3 (1.4517)	
3	Filling plug + OR	Duplex s. s.+NBR	EN 10088-1-X2CrNiMoN22-5-3 (1.4462)	A276/A790-S31803
4	Vent valve	Duplex stainless steel	EN 10088-1-X2CrNiMoN22-5-3 (1.4462)	A276/A790-S31803
5	Cable	EPR		
6	Cable gland plate	Stainless steel	EN 10088-1X1NiCrMoCu25-20-5 (1.4539)	AISI 904L
7	Cable gland	EPDM		
8	Shaft end	Duplex stainless steel	EN 10088-1-X2CrNiMoN22-5-3 (1.4462)	A276/A790-S31803
9	Removable sand guard	Duplex stainless steel	EN 10088-1-X2CrNiMoN22-5-3 (1.4462)	A276/A790-S31803
10	Mechanical seal cover	Duplex stainless steel	EN 10088-1-X2CrNiMoN22-5-3 (1.4462)	A276/A790-S31803
11	Mechanical seal	Carbon graphite / Aluminium oxide		
12	Bush bearings	Carbon graphite		
13	Elastomers	NBR		
14	Motor sleeve	Stainless steel	EN 10088-1X1NiCrMoCu25-20-5 (1.4539)	AISI 904L
15	Lower bracket	Duplex stainless steel	EN 10213-4-GX2CrNiMoCuN25-6-3-3 (1.4517)	
16	Thrust bearing bracket	Duplex stainless steel	EN 10213-4-GX2CrNiMoCuN25-6-3-3 (1.4517)	
17	Filling valve	Duplex stainless steel	EN 10088-1-X2CrNiMoN22-5-3 (1.4462)	A276/A790-S31803
18	Diaphragm	EPDM		
19	Lower cover	Duplex stainless steel	EN 10213-4-GX2CrNiMoCuN25-6-3-3 (1.4517)	
20	Bolts and screws	Duplex stainless steel	EN 10088-1-X2CrNiMoN22-5-3 (1.4462)	A276/A790-S31803
	Cooling liquid	Water + antifreeze		

L8wr-2p50-en_a_tm

L8W MOTOR SERIES IDENTIFICATION CODE

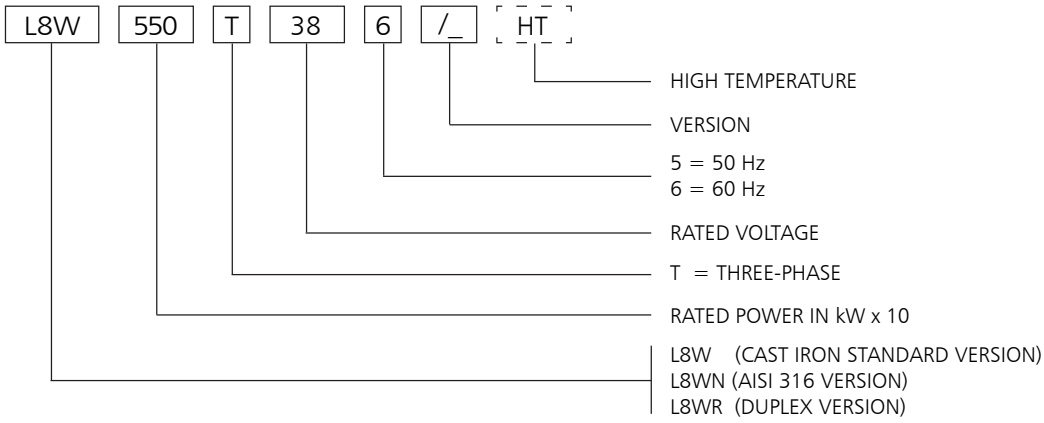

EXAMPLE : L8W550T386/A HT

L8W MOTOR :
RATED POWER 55 kW; THREE-PHASE;
RATED VOLTAGE 380 V; 60 Hz; /A VERSION; HIGH TEMPERATURE

RATING PLATE

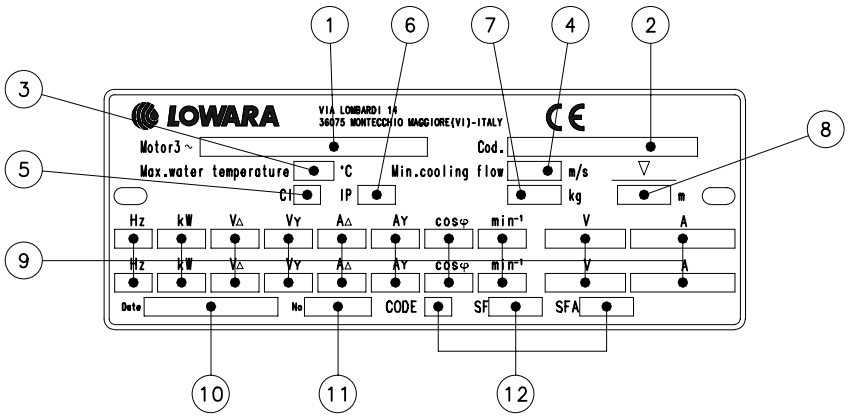

03557_A_SC

LEGEND

1 - Motor type
2 - Code
3 - Maximum water temperature
4 - Minimum water velocity
5 - Insulation class
6 - Protection class
7 - Weight
8 - Maximum immersion depht
9 - Operating characteristics
10 - Production date
11 - Serial number
12 - Characteristics at service factor

L8W MOTOR SERIES
DIMENSIONS AND WEIGHTS AT 60 Hz

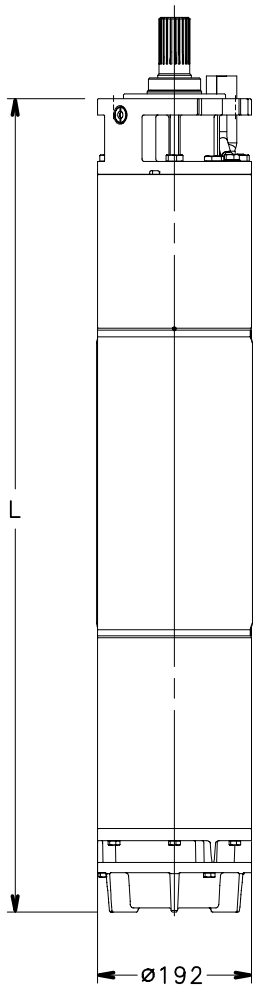

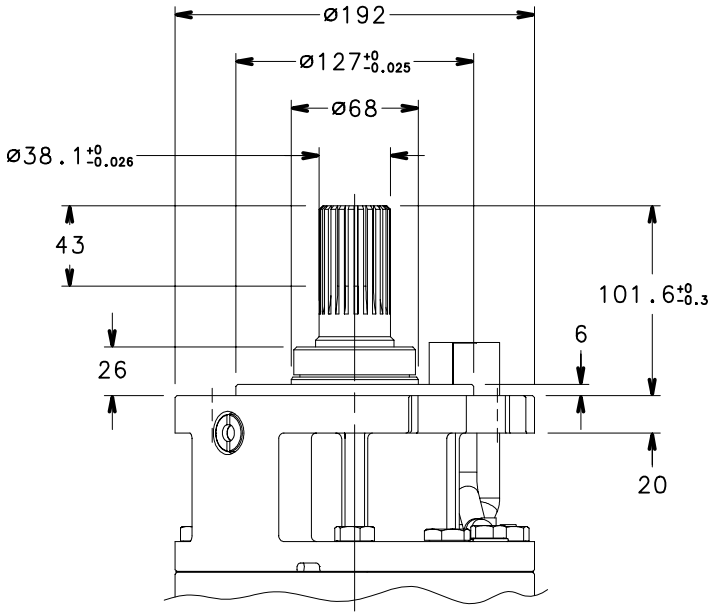

MOTOR TYPE	RATED POWER		DIMENSIONS (mm)	WEIGHT
	kW	HP	L	kg
L8W300T386-405	30	40	1015	145
L8W370T386-405	37	50	1105	162
L8W450T386-405	45	60	1195	180
L8W520T386-405	52	70	1285	200
L8W550T386-405	55	75	1325	206
L8W600T386-405	60	80	1375	217
L8W670T386-405	67	90	1465	235
L8W750T386-405	75	100	1555	252
L8W830T386-405	83	110	1615	265
L8W930T386-405	93	125	1755	290

l8w-2p60_a_td

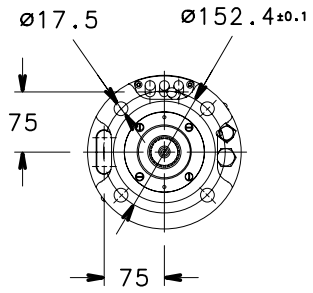

MOTOR TYPE	RATED POWER		DIMENSIONS (mm)	WEIGHT
	kW	HP	L	kg
L8W300T386-405 HT	30	40	1105	162
L8W370T386-405 HT	37	50	1195	180
L8W450T386-405 HT	45	60	1285	200
L8W520T386-405 HT	52	70	1325	206
L8W550T386-405 HT	55	75	1375	217
L8W600T386-405 HT	60	80	1465	235
L8W670T386-405 HT	67	90	1555	252
L8W750T386-405 HT	75	100	1615	265
L8W830T386-405 HT	83	110	1755	290

l8w-ht-2p60_a_td

03550_C_DD

L8W MOTOR SERIES
THREE-PHASE OPERATING CHARACTERISTICS AT 60 Hz

MOTOR TYPE THREE-PHASE	RATED POWER		RATED VOLTAGE	OPERATING CHARACTERISTICS AT RATED POWER				DIRECT ON-LINE STARTING			SERVICE FACTOR	SERVICE FACTOR AMPS	MAX WATER TEMP.	CABLE TYPE Sec. (mm^2)		
	kW	HP	V	A	rpm	η %	cosφ	Is/In	Ts/Tn	Tmax/Tn	SF	SFA	°C	DOL	Y/D	L (m)
L8W300T386	30	40	380	67,8	3470	81,5	0,83	5,50	1,04	2,22	1,15	78,0	30	10	6	5,5
L8W300T405			460	56,0								64,4		10	4	
L8W370T386	37	50	380	83,5	3475	81,5	0,83	5,26	1,04	2,23	1,15	96,1	30	16	6	5,5
L8W370T405			460	69,0								79,4		10	6	
L8W450T386	45	60	380	99,3	3480	83	0,83	4,98	0,98	2,22	1,15	114	30	16	10	5,5
L8W450T405			460	82,0								94,3		16	6	
L8W520T386	52	70	380	116	3475	83	0,82	5,56	1,06	2,22	1,15	134	30	25	10	5,5
L8W520T405			460	96,0								110		16	10	
L8W550T386	55	75	380	121	3475	83,5	0,83	5,44	1,06	2,24	1,15	139	30	25	10	5,5
L8W550T405			460	100								115		16	10	
L8W600T386	60	80	380	130	3480	84	0,84	5,07	1,04	2,23	1,15	149	30	25	16	5,5
L8W600T405			460	107								123		16	10	
L8W670T386	67	90	380	146	3480	84	0,83	5,13	1,03	2,23	1,15	168	30	35	16	5,5
L8W670T405			460	121								139		25	10	
L8W750T386	75	100	380	162	3485	84	0,84	5,04	1,01	2,22	1,15	187	30	35	16	5,5
L8W750T405			460	134								154		25	16	
L8W830T386	83	110	380	179	3485	84	0,84	4,79	0,97	2,28	1,15	206	30	35	16	5,5
L8W830T405			460	148								170		35	16	
L8W930T386	93	125	380	201	3490	84	0,84	4,6	1,02	2,22	1,15	231	30	50	25	5,5
L8W930T405			460	166								191		35	16	

Ts/Tn = ratio between starting torque and nominal torque.

Tmax/Tn = ratio between maximum torque and nominal torque.

l8w-2p60_c_te

L8W HT MOTOR SERIES
THREE-PHASE OPERATING CHARACTERISTICS AT 60 Hz

MOTOR TYPE THREE-PHASE	RATED POWER		RATED VOLTAGE	OPERATING CHARACTERISTICS AT RATED POWER				DIRECT ON-LINE STARTING			SERVICE FACTOR	SERVICE FACTOR AMPS	MAX WATER TEMP.	CABLE TYPE Sec. (mm^2)		
	kW	HP	V	A	rpm	η %	cosφ	Is/In	Ts/Tn	Tmax/Tn	SF	SFA	°C	DOL	Y/D	L (m)
L8W300T386 HT	30	40	380	70,5	3510	83,7	0,79	6,24	1,28	2,75	1,15	78,7	45	10	6	5,5
L8W300T405 HT			460	58,2								65,0		10	4	
L8W370T386 HT	37	50	380	81,1	3515	84,0	0,80	6,09	1,19	2,70	1,15	92,0	45	16	6	5,5
L8W370T405 HT			460	67,0								76,0		10	6	
L8W450T386 HT	45	60	380	99,9	3505	84,0	0,79	6,47	1,22	2,57	1,15	107	45	16	10	5,5
L8W450T405 HT			460	82,5								88,0		16	6	
L8W520T386 HT	52	70	380	114	3495	84,0	0,83	5,79	1,12	2,37	1,15	129	45	25	10	5,5
L8W520T405 HT			460	94,0								106		16	10	
L8W550T386 HT	55	75	380	120	3505	84,5	0,82	5,47	1,13	2,43	1,15	136	45	25	10	5,5
L8W550T405 HT			460	99,1								112		16	10	
L8W600T386 HT	60	80	380	133	3505	85,3	0,81	5,64	1,15	2,49	1,15	149	45	25	16	5,5
L8W600T405 HT			460	110								123		16	10	
L8W670T386 HT	67	90	380	146	3510	85,4	0,82	5,58	1,13	2,49	1,15	166	45	35	16	5,5
L8W670T405 HT			460	121								137		25	10	
L8W750T386 HT	75	100	380	161	3505	83,6	0,83	5,33	1,07	2,52	1,15	185	45	35	16	5,5
L8W750T405 HT			460	133								153		25	16	
L8W830T386 HT	83	110	380	177	3520	85,8	0,82	5,23	1,14	2,49	1,15	197	45	35	16	5,5
L8W830T405 HT			460	146								163		35	16	

Ts/Tn = ratio between starting torque and nominal torque.

Tmax/Tn = ratio between maximum torque and nominal torque.

l8w-ht-2p60_a_te

10" Submersible motors

Water filled submersible motors.
The robust design together with excellent choise of materials ensures optimal performance, ease of installation and reliability in all applications. For extremely demanding operation as high water temperature or aggressive environments special versions are available.

L10W Series 60 Hz

❑ **Rewindable stator**

❑ **Thrust bearing Kingsbury type**

❑ **Mechanical seal**

SPECIFICATIONS

- **Stainless steel** outer sleeve.
- **Rewindable stator**.
- Class **Y insulation**.
- Protection class: **IP68**.
- Compensating bellows for internal liquid expansion.
- Axial load supported by Kingsbury type thrust bearing.
- **Mechanical seal** protected by sand guard.
- Maximum **immersion depth**: 350 m.
- Maximum **number of starts per hour** at regular intervals: 8.
- Maximum supply **voltage variations** allowed : ±10%.
- Maximum water **temperature**: 30°C.
  Max. temperature applies to motors working in a installation capable of delivering a flow of water around the motor jacket of at least 0,5 m/s.
- **Axial thrust**: 65000 N from 93 to150 kW.
- **Power supply** cable suitable for drinkable water.
- **Versions**:
  - Three-phase:
    93 to 150 kW 380 V, 60 Hz.
    93 to 150 kW 460 V, 60 Hz.
- **Horizontal operation**: valid for all versions provided that the direction of the axial thrust generated by the impellers is always from the pump to the motor.

SPECIAL VERSIONS

- Motors with double cable outlet for star/delta start.
- **L10WN series**: complete range available realized of AISI 316 stainless steel.
- **L10WR series**: complete range available realized of Duplex stainless steel.
- **HT series**: complete range available for all the L10W/N/R construction, realized for applications in high temperature environments (**up to 60°C**) or under inverter.

OPTIONAL FEATURES

- Silicon Carbide mechanical seal.
- Special voltages.

ACCESSORIES

- Temperature sensor **PT 100 / PTC**.

L10W - L10WN - L10WR MOTOR SERIES
MOTOR CROSS SECTION

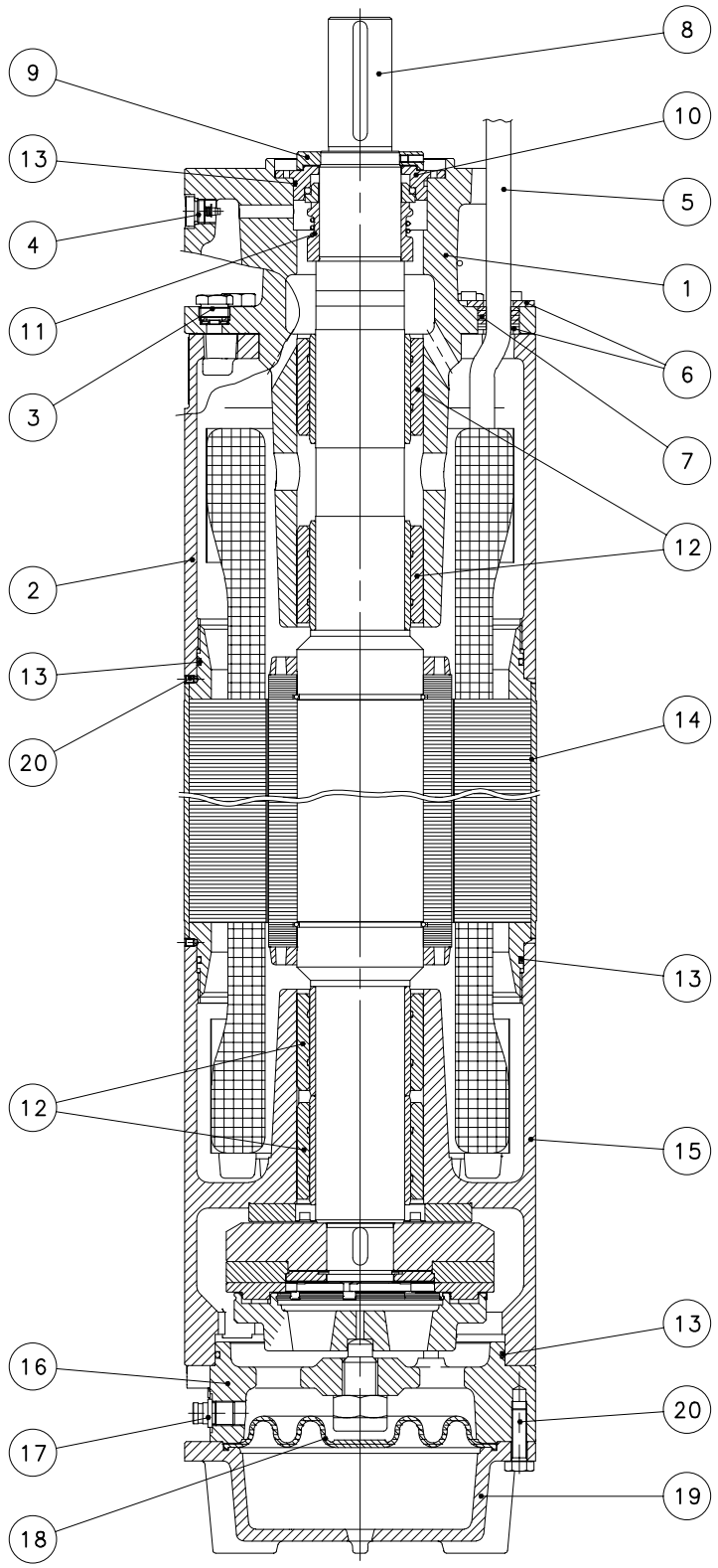

L10W TABLE OF MATERIALS

REF. N°	PART	MATERIAL	DESIGNATION EUROPE	USA
1	Upper bracket	Cast iron	EN-GJL-200	Class 25 B
2	Spacer	Cast iron	EN-GJL-200	Class 25 B
3	Filling plug + OR	Stainless steel+NBR	EN 10088-1-X5CrNiMo17-12-2 (1.4401)	AISI 316
4	Vent valve	Stainless steel	EN 10088-1-X5CrNiMo17-12-2 (1.4401)	AISI 316
5	Cable	EPR		
6	Cable gland plate	Stainless steel	EN 10088-1-X5CrNi18-10 (1.4301)	AISI304
7	Cable gland	EPDM		
8	Shaft end	Duplex stainless steel	EN 10088-1-X2CrNiMoN22-5-3 (1.4462)	A276/A790-S31803
9	Removable sand guard	Stainless steel	EN 10088-1-X2CrNiMo17-12-2 (1.4404)	AISI 316L
10	Mechanical seal cover	Stainless steel	EN 10088-1-X2CrNiMo17-12-2 (1.4404)	AISI 316L
11	Mechanical seal	Carbon graphite / Aluminium oxide		
12	Bush bearings	Carbon graphite		
13	Elastomers	NBR		
14	Motor sleeve	Stainless steel	EN 10088-1-X2CrNi19-11 (1.4306)	AISI304L
15	Lower bracket	Cast iron	EN-GJL-200	Class 25 B
16	Thrust bearing bracket	Cast iron	EN-GJL-200	Class 25 B
17	Filling valve	Stainless steel	EN 10088-1-X5CrNiMo17-12-2 (1.4401)	AISI 316
18	Diaphragm	EPDM		
19	Lower cover	Cast iron	EN-GJL-200	Class 25 B
20	Bolts and screws	Stainless steel	EN 10088-1-X5CrNi18-10 (1.4301)	AISI304
	Cooling liquid	Water + antifreeze		

L10w-2p50-en_a_tm

L10WN TABLE OF MATERIALS

REF. N°	PART	MATERIAL	DESIGNATION EUROPE	USA
1	Upper bracket	Stainless steel	EN 10213-4 - GX5CrNiMo19-11-2 (1.4408)	ASTM CF-8M (AISI 316 cast)
2	Spacer	Stainless steel	EN 10213-4 - GX5CrNiMo19-11-2 (1.4408)	ASTM CF-8M (AISI 316 cast)
3	Filling plug + OR	Stainless steel+NBR	EN 10088-1-X5CrNiMo17-12-2 (1.4401)	AISI 316
4	Vent valve	Stainless steel	EN 10088-1-X5CrNiMo17-12-2 (1.4401)	AISI 316
5	Cable	EPR		
6	Cable gland plate	Stainless steel	EN 10088-1-X5CrNiMo17-12-2 (1.4401)	AISI 316
7	Cable gland	EPDM		
8	Shaft end	Duplex stainless steel	EN 10088-1-X2CrNiMoN22-5-3 (1.4462)	A276/A790-S31803
9	Removable sand guard	Stainless steel	EN 10088-1-X2CrNiMo17-12-2 (1.4404)	AISI 316L
10	Mechanical seal cover	Stainless steel	EN 10088-1-X2CrNiMo17-12-2 (1.4404)	AISI 316L
11	Mechanical seal	Carbon graphite / Aluminium oxide		
12	Bush bearings	Carbon graphite		
13	Elastomers	NBR		
14	Motor sleeve	Stainless steel	EN 10088-1-X2CrNiMo17-12-2 (1.4404)	AISI 316L
15	Lower bracket	Stainless steel	EN 10213-4 - GX5CrNiMo19-11-2 (1.4408)	ASTM CF-8M (AISI 316 cast)
16	Thrust bearing bracket	Stainless steel	EN 10213-4 - GX5CrNiMo19-11-2 (1.4408)	ASTM CF-8M (AISI 316 cast)
17	Filling valve	Stainless steel	EN 10088-1-X5CrNiMo17-12-2 (1.4401)	AISI 316
18	Diaphragm	EPDM		
19	Lower cover	Stainless steel	EN 10213-4 - GX5CrNiMo19-11-2 (1.4408)	ASTM CF-8M (AISI 316 cast)
20	Bolts and screws	Stainless steel	EN 10088-1-X5CrNiMo17-12-2 (1.4401)	AISI 316
	Cooling liquid	Water + antifreeze		

L10wn-2p50-en_a_tm

L10WR TABLE OF MATERIALS

REF. N°	PART	MATERIAL	DESIGNATION EUROPE	USA
1	Upper bracket	Duplex stainless steel	EN 10213-4-GX2CrNiMoCuN25-6-3-3 (1.4517)	
2	Spacer	Duplex stainless steel	EN 10213-4-GX2CrNiMoCuN25-6-3-3 (1.4517)	
3	Filling plug + OR	Duplex s. s.+NBR	EN 10088-1-X2CrNiMoN22-5-3 (1.4462)	A276/A790-S31803
4	Vent valve	Duplex stainless steel	EN 10088-1-X2CrNiMoN22-5-3 (1.4462)	A276/A790-S31803
5	Cable	EPR		
6	Cable gland plate	Stainless steel	EN 10088-1X1NiCrMoCu25-20-5 (1.4539)	AISI 904L
7	Cable gland	EPDM		
8	Shaft end	Duplex stainless steel	EN 10088-1-X2CrNiMoN22-5-3 (1.4462)	A276/A790-S31803
9	Removable sand guard	Duplex stainless steel	EN 10088-1-X2CrNiMoN22-5-3 (1.4462)	A276/A790-S31803
10	Mechanical seal cover	Duplex stainless steel	EN 10088-1-X2CrNiMoN22-5-3 (1.4462)	A276/A790-S31803
11	Mechanical seal	Carbon graphite / Aluminium oxide		
12	Bush bearings	Carbon graphite		
13	Elastomers	NBR		
14	Motor sleeve	Stainless steel	EN 10088-1X1NiCrMoCu25-20-5 (1.4539)	AISI 904L
15	Lower bracket	Duplex stainless steel	EN 10213-4-GX2CrNiMoCuN25-6-3-3 (1.4517)	
16	Thrust bearing bracket	Duplex stainless steel	EN 10213-4-GX2CrNiMoCuN25-6-3-3 (1.4517)	
17	Filling valve	Duplex stainless steel	EN 10088-1-X2CrNiMoN22-5-3 (1.4462)	A276/A790-S31803
18	Diaphragm	EPDM		
19	Lower cover	Duplex stainless steel	EN 10213-4-GX2CrNiMoCuN25-6-3-3 (1.4517)	
20	Bolts and screws	Duplex stainless steel	EN 10088-1-X2CrNiMoN22-5-3 (1.4462)	A276/A790-S31803
	Cooling liquid	Water + antifreeze		

L10wr-2p50-en_a_tm

L10W MOTOR SERIES IDENTIFICATION CODE

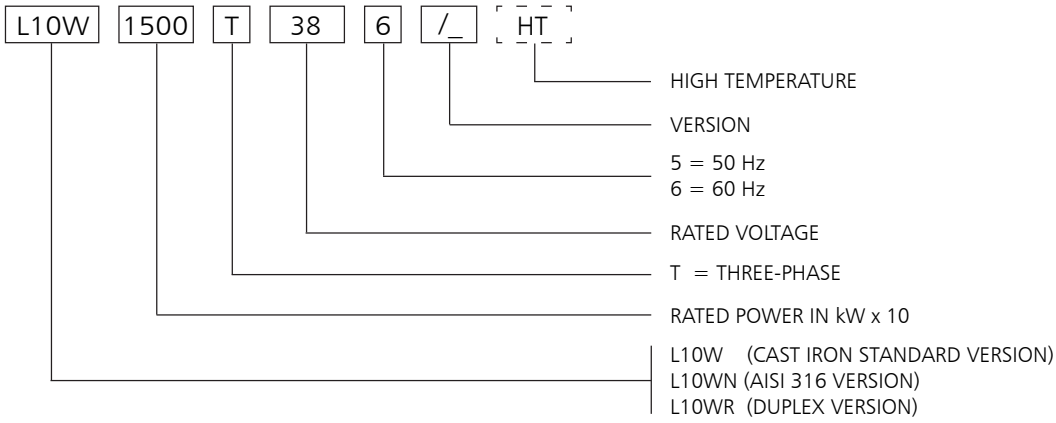

EXAMPLE : L10W1500T386/A HT

L10W MOTOR :
RATED POWER 150 kW; THREE-PHASE;
RATED VOLTAGE 380 V; 60 Hz; /A VERSION; HIGH TEMPERATURE

RATING PLATE

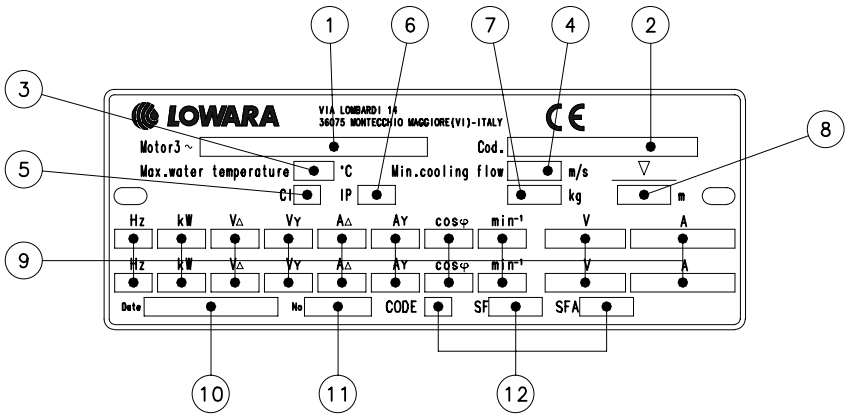

03557_A_SC

LEGEND

1 - Motor type
2 - Code
3 - Maximum water temperature
4 - Minimum water velocity
5 - Insulation class
6 - Protection class
7 - Weight
8 - Maximum immersion depht
9 - Operating characteristics
10 - Production date
11 - Serial number
12 - Characteristics at service factor

L10W MOTOR SERIES
DIMENSIONS AND WEIGHTS AT 60 Hz

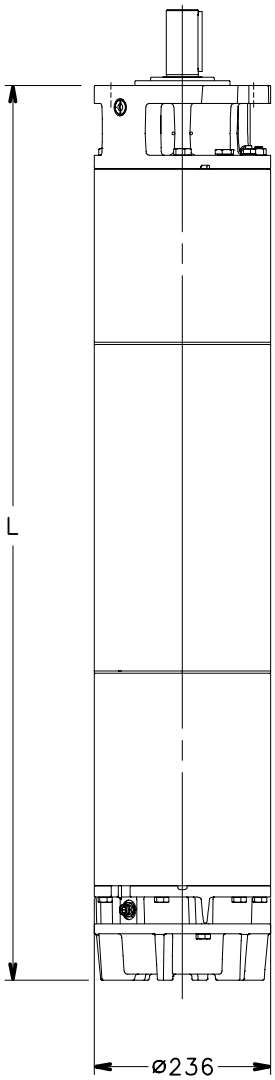

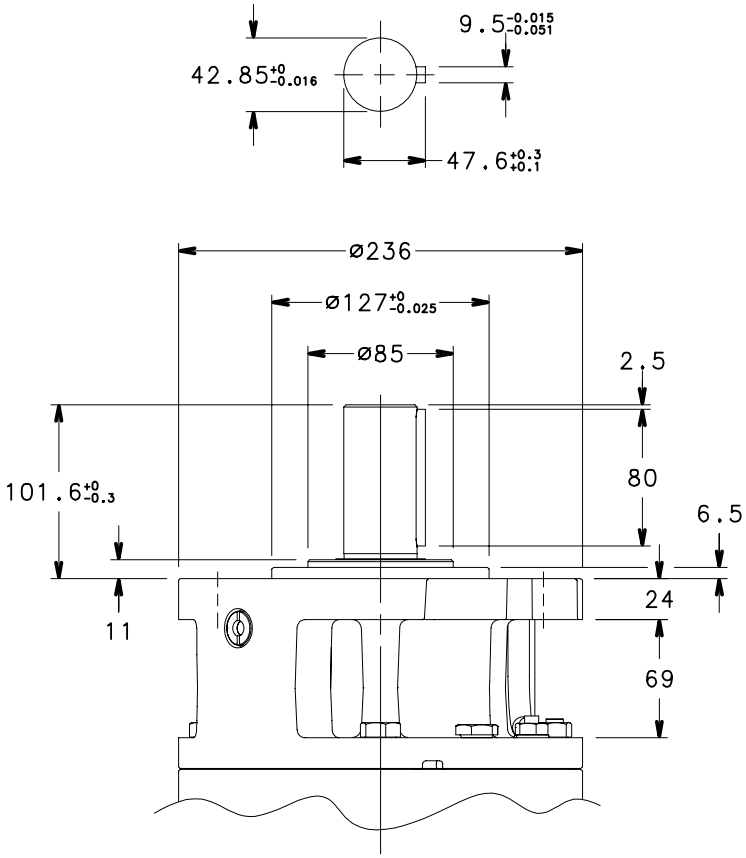

MOTOR TYPE	RATED POWER		DIMENSIONS (mm)	WEIGHT
	kW	HP	L	kg
L10W930T386-405	93	125	1562	360
L10W1100T386-405	110	150	1702	401
L10W1300T386-405	130	175	1852	448
L10W1500T386-405	150	200	1982	487

l10w-2p60_a_td

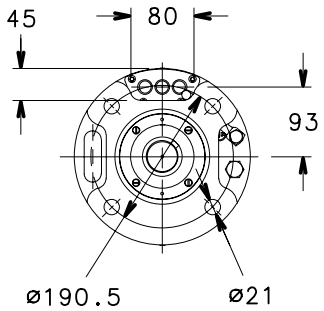

MOTOR TYPE	RATED POWER		DIMENSIONS (mm)	WEIGHT
	kW	HP	L	kg
L10W830T386-405 HT	83	110	1562	360
L10W930T386-405 HT	93	125	1702	401
L10W1100T386-405 HT	110	150	1852	448
L10W1300T386-405 HT	130	175	1982	487

l10w-ht-2p60_a_td

03554_C_DD

L10W MOTOR SERIES
THREE-PHASE OPERATING CHARACTERISTICS AT 60 Hz

MOTOR TYPE THREE-PHASE	RATED POWER		RATED VOLTAGE	OPERATING CHARACTERISTICS AT RATED POWER				DIRECT ON-LINE STARTING			SERVICE FACTOR	SERVICE FACTOR AMPS	MAX WATER TEMP.	CABLE TYPE Sec. (mm^2)		
	kW	HP	V	A	rpm	η %	cosφ	Is/In	Ts/Tn	Tmax/Tn	SF	SFA	°C	DOL	Y/D	L (m)
L10W930T386	93	125	380	199	3510	85,0	0,84	5,55	1,02	2,22	1,15	228	30	50	25	5
L10W930T405			460	164								189		35	16	
L10W1100T386	110	150	380	275	3520	85,5	0,82	6,38	1,43	2,19	1,15	316	30	70	25	5
L10W1100T405			460	227								261		50	16	
L10W1300T386	130	175	380	286	3520	85,5	0,81	6,31	1,5	2,22	1,15	329	30	70	35	5
L10W1300T405			460	236								271		50	25	
L10W1500T386	150	200	380	329	3525	85,5	0,81	6,24	1,56	2,22	1,15	379	30	70	35	5
L10W1500T405			460	272								313		70	35	

Ts/Tn = ratio between starting torque and nominal torque. l10w-2p60_b_te

Tmax/Tn = ratio between maximum torque and nominal torque.

L10W HT MOTOR SERIES
THREE-PHASE OPERATING CHARACTERISTICS AT 60 Hz

MOTOR TYPE THREE-PHASE	RATED POWER		RATED VOLTAGE	OPERATING CHARACTERISTICS AT RATED POWER				DIRECT ON-LINE STARTING			SERVICE FACTOR	SERVICE FACTOR AMPS	MAX WATER TEMP.	CABLE TYPE Sec. (mm^2)		
	kW	HP	V	A	rpm	η %	cosφ	Is/In	Ts/Tn	Tmax/Tn	SF	SFA	°C	DOL	Y/D	L (m)
L10W830T386 HT	83	110	380	180	3530	85,2	0,82	6,11	1,15	2,48	1,15	202	45	50	25	5
L10W830T405 HT			460	149								167		35	16	
L10W930T386 HT	93	125	380	212	3545	86,0	0,78	8,27	1,69	2,58	1,15	236	45	70	25	5
L10W930T405 HT			460	175								195		50	16	
L10W1100T386 HT	110	150	380	254	3545	87,6	0,75	7,09	1,77	2,62	1,15	281	45	70	35	5
L10W1100T405 HT			460	210								232		50	25	
L10W1300T386 HT	130	175	380	298	3550	86,4	0,77	6,90	1,80	2,56	1,15	330	45	70	35	5
L10W1300T405 HT			460	246								273		70	35	

Ts/Tn = ratio between starting torque and nominal torque. l10w-ht-2p60_a_te

Tmax/Tn = ratio between maximum torque and nominal torque.

ACCESSORIES

ISO Threaded Flanges 58

Supporting Collars 59

Motor-Control Panel Combination Table 60

Electrical Panels 62

Level control panels 68

Level probe module 69

Lightning protection 70

Cooling shrouds 71

ISO-THREADED FLANGES

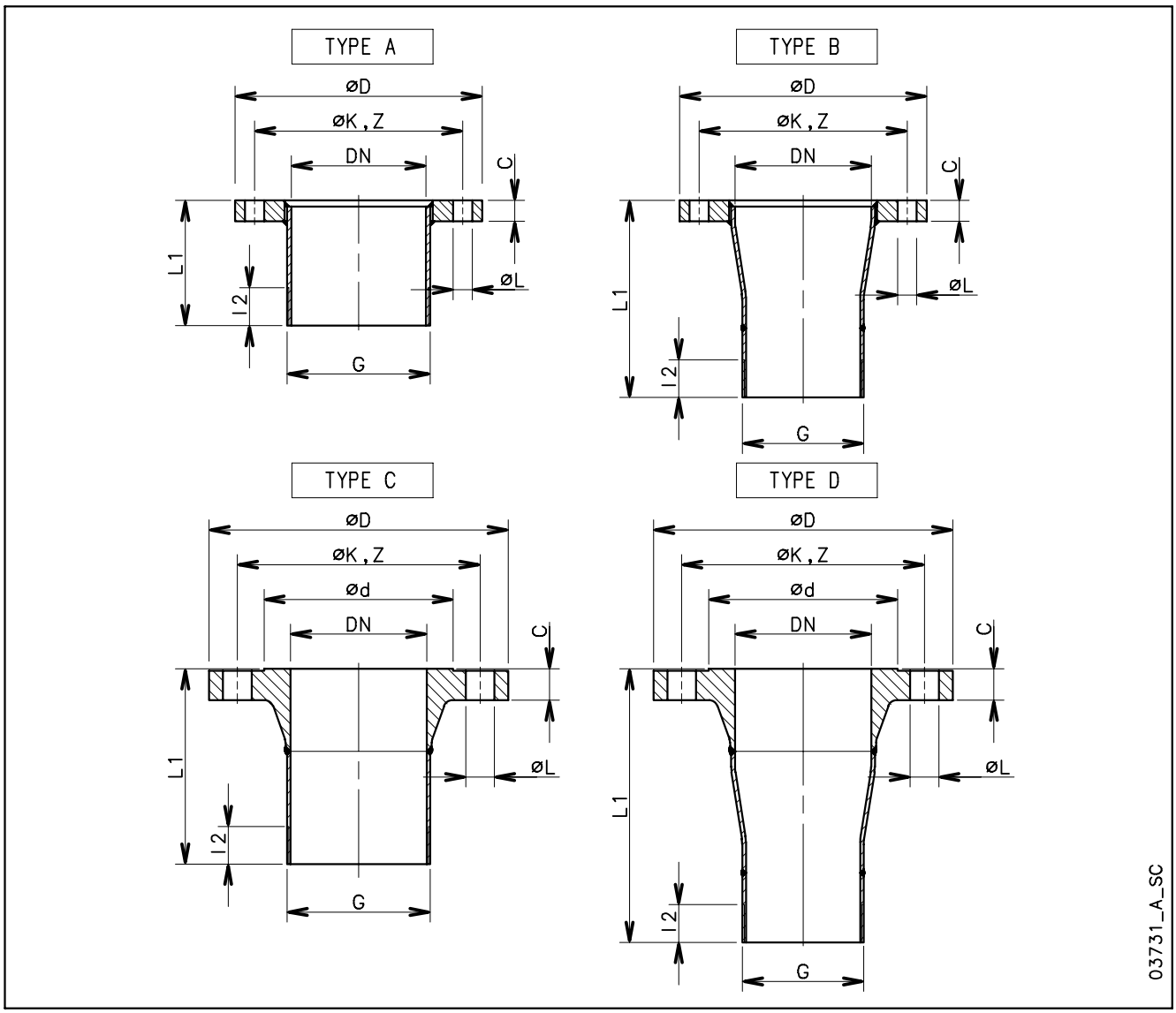

PUMP TYPE	THREADING ISO 7-1 G	Dimensions (mm)										
		* Flange according to EN 1092-1										
		DN	PN	Ø D	Ø d	Ø K	Z	Ø L	C	L1	l2	TYPE
6Z855 6Z875 6Z895 6Z8125	R 5	125	10÷16	250	-	210	8	18	22	108	44	A
		125	25÷40	270	188	220	8	26	26	168	44	C
		125	63	295	188	240	8	30	34	188	44	C
		150	10÷16	285	-	240	8	22	22	248	44	B
		150	25÷40	300	218	250	8	26	28	315	44	D
		150	63	345	218	280	8	33	36	335	44	D

* Flanges according to ASME B16.5 available on request.

z8-flange-2p60_b_td

CARRYING CLAMPS

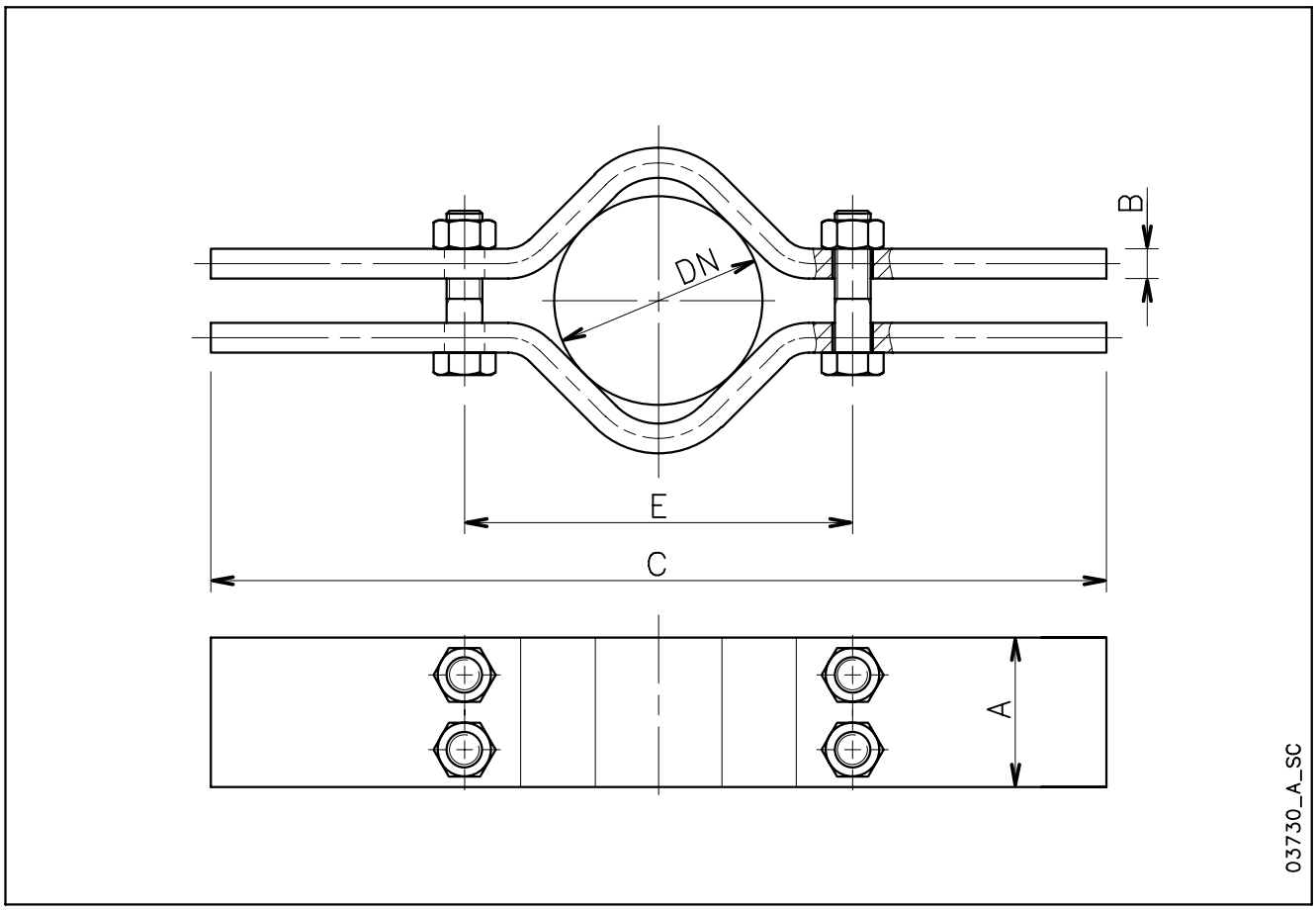

NOMINAL PIPE DIAMETER DN		CARRYING CLAMPS						PIPE WEIGHT		
		Dimensions (mm)					Pmax (1)	Flanged	Threaded	Water
		A	B	C	E	SCREW	kg	kg/m	kg/m	kg/m
65	R 2 1/2"	50	15	600	130	M16x90	1300	6,7	8,0	3,3
80	R 3"	80	15	600	180	M20x70	3400	8,4	10,5	5,0
100	R 4"	80	15	600	180	M20x110	3400	20,5	15,0	7,9
125	R 5"	100	20	600	260	M24x90	7250	27,5	18,5	12,3
150	R 6"	100	20	600	260	M24x130	7250	33,0	22,0	17,6
175	R 7"	120	25	800	360	M30x110	9750	27,0	25,5	24,0
200	R 8"	120	25	800	360	M30x150	9750	33,0	34,0	31,5
250	R 10"	120	25	800	360	M30x220	9750	48,0	48,0	49,0

1) Max admissible weight.

clamp-en_b_td

NOTE. Two sets of clamps are necessary for the installation of one unit.

Material : EN 10027-1-S235JR (1.0038) painted.

L6C - L6W SERIES MOTORS
MOTOR - CONTROL PANEL COMBINATION TABLE

MOTOR TYPE L6C - 6" THREE-PHASE	RATED POWER		CURRENT AT S.F. 380 V	PANEL TYPE					
	kW	HP	A	QTD/...	Q3D/...	*Q3Y/...	Q3I/...	Q3A/...	Q3SF/...
	4	5,5	11,5	...40-75	...40-75	...40-75	...40-75	...40-75	...75
	5,5	7,5	16,1	...75-92	...75-92	...75-92	...75-92	...75-92	...75
	7,5	10	20	-	...92-110	...92-110	...92-110	...92-110	...150
	9,3	12,5	25	-	...110-150	...110-150	...110-150	...110-150	...150
	11	15	28,2	-	...110-150	...110-150	...110-150	...110-150	...150
	15	20	37,3	-	...150-185	...150-185	...150-185	...150-185	...220
	18,5	25	48,4	-	...185-220	...185-220	...185-220	...185-220	...300
	22	30	60,2	-	...220-300	...220-300	...220-300	...220-300	...370
	30	40	75	-	-	...370-450	...370-450	...370-450	...450
	37	50	90	-	-	...450-550	...450-550	...450-550	...550

For different voltages please contact our sales network

L6c-2p60_b_tc

* require 6-wire suitable motor

MOTOR TYPE L6W - 6" THREE-PHASE	RATED POWER		CURRENT AT S.F. 380 V	PANEL TYPE					
	kW	HP	A	QTD/...	Q3D/...	Q3I/...	Q3A/...	Q3Y/...	Q3SF/...
	4	5,5	11,2	...40-75	...40-75	...40-75	...40-75	...40-75	...75
	5,5	7,5	15,1	...40-75	...40-75	...40-75	...40-75	...40-75	...75
	7,5	10	19,4	...75-92	...75-92	...75-92	...75-92	...75-92	...150
	9,3	12,5	23,8	-	...92-110	...92-110	...92-110	...92-110	...150
	11	15	27,8	-	...110-150	...110-150	...110-150	...110-150	...150
	13	17,5	32,9	-	...150-185	...150-185	...150-185	...150-185	...220
	15	20	36,6	-	...150-185	...150-185	...150-185	...150-185	...220
	18,5	25	45,1	-	...185-220	...185-220	...185-220	...185-220	...300
	22	30	53,8	-	...220-300	...220-300	...220-300	...220-300	...300
	26	35	66,5	-	...300-370	...300-370	...300-370	...300-370	...370
	30	40	72,6	-	...300-370	...300-370	...300-370	...300-370	...370
	37	50	95,9	-	-	...450-550	...450-550	...450-550	...550
MOTOR TYPE L6W HT - 6" THREE-PHASE	4	5,5	12,3	...40-75	...40-75	...40-75	...40-75	...40-75	...75
	5,5	7,5	15,5	...40-75	...40-75	...40-75	...40-75	...40-75	...75
	7,5	10	20,2	...92-110	...92-110	...92-110	...92-110	...92-110	...150
	9,3	12,5	24,2	-	...92-110	...92-110	...92-110	...92-110	...150
	11	15	28,9	-	...110-150	...110-150	...110-150	...110-150	...150
	13	17,5	34,1	-	...150-185	...150-185	...150-185	...150-185	...220
	15	20	38,3	-	...150-185	...150-185	...150-185	...150-185	...220
	18,5	25	46,3	-	...185-220	...185-220	...185-220	...185-220	...300
	22	30	58,6	-	...220-300	...220-300	...220-300	...220-300	...300
	26	35	64,8	-	...300-370	...300-370	...300-370	...300-370	...370
	30	40	82,1	-	...370-450	...370-450	...370-450	...370-450	...450

For different voltages, please contact our sales network.

L6w-2p60_b_tc

L8W - L10W SERIES MOTORS
MOTOR - CONTROL PANEL COMBINATION TABLE

MOTOR TYPE L8W - 8" THREE-PHASE	RATED POWER kW	RATED POWER HP	CURRENT AT S.F. 380 V A	PANEL TYPE	Q3I/...	Q3A/...	Q3SF/...		
	30	40	78,0		...370-450	...370-450	...450		
	37	50	96,1		...450-550	...450-550	...550		
	45	60	114		...550-750	...550-750	...590		
	52	70	134		...550-750	...550-750	...750		
	55	75	139		...750-900	...750-900	...750		
	60	80	149		...750-900	...750-900	...900		
	67	90	168		...750-900	...750-900	...900		
	75	100	187		...900-1100	...900-1100	...1100		
	83	110	206		...900-1100	...900-1100	...1100		
	93	125	231		...1100-1320	...1100-1320	...1100		
MOTOR TYPE L8W HT - 8" THREE-PHASE	30	40	78,7		...370-450	...370-450	...450		
	37	50	92,0		...450-550	...450-550	...550		
	45	60	107		...450-550	...450-550	...590		
	52	70	129		...550-750	...550-750	...750		
	55	75	136		...550-750	...550-750	...750		
	60	80	149		...750-900	...750-900	...900		
	67	90	166		...750-900	...750-900	...900		
	75	100	185		...900-1100	...900-1100	...900		
	83	110	197		...900-1100	...900-1100	...1100		

For different voltages, please contact our sales network.

L8w-2p60_c_tc

MOTOR TYPE L10W - 10" THREE-PHASE	RATED POWER kW	RATED POWER HP	CURRENT AT S.F. 380 V A	PANEL TYPE Q3I/...	Q3A/...	Q3SF/...			
	93	125	228	...1100-1320	...1100-1320	...1100			
	110	150	316	...1600-2000	...1600-2000	(1)			
	130	175	329	...1600-2000	...1600-2000	(1)			
	150	200	379	...1600-2000	...1600-2000	(1)			
MOTOR TYPE L10W HT - 10" THREE-PHASE	83	110	202	...900-1100	...900-1100	...1100			
	93	125	236	...1320-1600	...1320-1600	...1100			
	110	150	281	...1320-1600	...1320-1600	(1)			
	130	175	330	...1600-2000	...1600-2000	(1)			

(1) On request.

L10w-2p60_c_tc

For different voltages, please contact our sales network.

Three-phase Electric Panel

APPLICATIONS

- Protection and control of a three-phase surface or submersible electric pump.

QTD Series

SPECIFICATIONS

- Control through an external enable contact.
- Supply voltage: 3 x 400 V ±10%.
- Frequency: 50/60 Hz.
- Power: 0,25 to 9,2 kW.
- Direct motor start.
- Short-circuit and overload protection.
- Protection class: IP54.
- Ambient temperature: -5 to +40 °C (according to EN 60439-1).
- Maximum relative humidity: 50% at +40°C, provided that no condensation occurs (according to EN 60439-1).
- Wall mounted.
- Metal enclosure.
- Ready for installation of dry running control float or pressure switch (to be ordered separately).
- Power and thermal overload indicator lights.

OPTIONAL ACCESSORIES

- VR3 three-phase module for overvoltage protection (lightning protector).
- KSL series 24 V level kit. Probe module for protection against dry running (set of three electrodes included in the supply).

SELECTION

- For a suitable choice of control panel, be sure the electrical input of the motor (Ampere) is included in the rated current value mentioned in the table below.

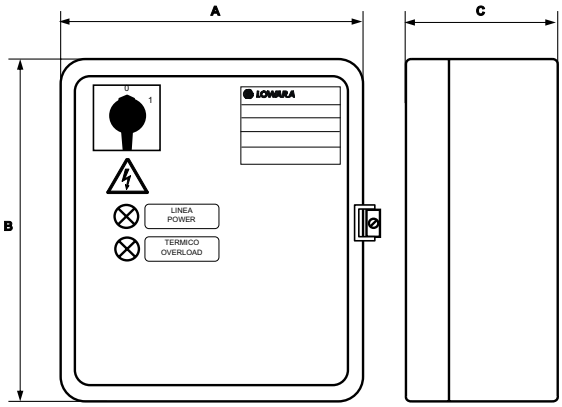

MODEL	RATED VOLTAGE	RATED POWER		RATED CURRENT	DIMENSIONS			WEIGHT
					A	B	C	
	V	kW	HP	A	mm	mm	mm	Kg
QTD/02-03	3 x 400 V ± 10 %	0,25-0,37	0,33-0,50	0,63 ÷ 1	235	265	150	5,8
QTD/03-05	3 x 400 V ± 10 %	0,37-0,55	0,55-0,75	1 ÷ 1,6	235	265	150	5,8
QTD/05-07	3 x 400 V ± 10 %	0,55-0,75	0,75-1	1,6 2,5	235	265	150	5,8
QTD/07-15	3 x 400 V ± 10 %	0,75-1,5	1-2	2,5 4	235	265	150	5,8
QTD/15-22	3 x 400 V ± 10 %	1,5-2,2	2-3	4 ÷ 6,3	235	265	150	5,8
QTD/22-40	3 x 400 V ± 10 %	2,2-4	3-5,5	6,3 ÷ 10	235	265	150	5,8
QTD/40-75	3 x 400 V ± 10 %	4-7,5	5,5-10	10 ÷ 16	235	265	150	5,8
QTD/75-92	3 x 400 V ± 10 %	7,5-9,2	10-12,5	16 ÷ 20	235	265	150	5,8

CB-QTD-en_c_te

Three-phase Electric Panel

APPLICATIONS

- Protection and control of a three-phase surface or submersible electric pump.

Q3D Series

SPECIFICATIONS

- Manual control through an Auto/Man selector switch.
- Automatic control through an external enable contact.
- Supply voltage: 3 x 400 V ±10%.
- Frequency: 50/60 Hz.
- 24 V AC low voltage auxiliary circuit.
- Power: 0,25 to 37 kW.
- Direct motor start.
- Short-circuit and overload protection.
- Protection class: IP54.
- Ambient temperature: -5 to +40 °C (according to EN 60439-1).
- Maximum relative humidity: 50% at +40°C, provided that no condensation occurs (according to EN 60439-1).
- Wall mounted.
- Metal enclosure.
- Power, pump running, thermal overload and dry running indicator lights.
- Ready for installation of dry running control float or pressure switch (to be ordered separately). Can be equipped with electronic protection module with electrodes.

OPTIONAL ACCESSORIES

- KSL series 24 V level kit. Probe module for protection against dry running (set of three electrodes included in the supply).
- Float.
- Pressure switch.
- VR3/SCA3 three-phase module for overvoltage protection (lightning protector).

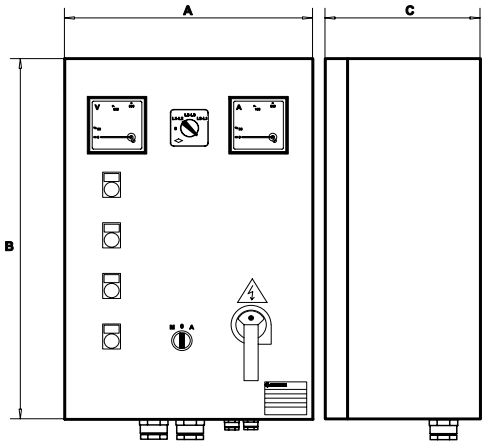

MODEL	RATED VOLTAGE	RATED POWER		RATED CURRENT	DIMENSIONS			WEIGHT
					A	B	C	
	V	kW	HP	A	mm	mm	mm	Kg
Q3D/02-03	3 x 400 V ± 10 %	0,25-0,37	0,33-0,50	0,63 ÷ 1	300	400	200	15
Q3D/03-05	3 x 400 V ± 10 %	0,37-0,55	0,5-0,75	1 ÷ 1,6	300	400	200	15
Q3D/05-07	3 x 400 V ± 10 %	0,55-0,75	0,75-1	1,6 ÷ 2,5	300	400	200	15
Q3D/07-15	3 x 400 V ± 10 %	0,75-1,5	1-2	2,5 ÷ 4	300	400	200	15
Q3D/15-22	3 x 400 V ± 10 %	1,5-2,2	2-3	4 ÷ 6,3	300	400	200	15
Q3D/22-40	3 x 400 V ± 10 %	2,2-4	3-5,5	6,3 ÷ 10	300	400	200	15
Q3D/40-75	3 x 400 V ± 10 %	4-7,5	5,5-10	10 ÷ 16	300	400	200	15
Q3D/75-92	3 x 400 V ± 10 %	7,5-9,2	10-12,5	16 ÷ 20	300	400	200	15
Q3D/92-110	3 x 400 V ± 10 %	9,2-11	12,5-15	20 ÷ 25	300	400	200	20
Q3D/110-150	3 x 400 V ± 10 %	11-15	15-20	22 ÷ 32	400	500	200	20
Q3D/150-185	3 x 400 V ± 10 %	15-18,5	20-25	28 ÷ 40	400	500	200	20
Q3D/185-220	3 x 400 V ± 10 %	18,5-22	25-30	36 ÷ 50	400	600	200	27
Q3D/220-300	3 x 400 V ± 10 %	22-30	30-40	45 ÷ 63	400	600	200	27
Q3D/300-370	3 x 400 V ± 10 %	30-37	40-50	57 ÷ 75	400	600	200	27

CB-Q3D-en_a_te

Three-phase Electric Panel

Q3Y Series

APPLICATIONS

- Protection and control of a three-phase surface or submersible electric pump.

SPECIFICATIONS

- Manual control through an Auto/Man selector switch.
- Automatic control through an external enable contact.
- Supply voltage: 3 x 400 V ±10%.
- Frequency: 50/60 Hz.
- 24 V AC low voltage auxiliary circuit.
- Power: 4 to 315 kW.
- Star-delta starting.
- Short-circuit and overload protection.
- Protection class: IP54.
- Ambient temperature: -5 to +40 °C (according to EN 60439-1).
- Maximum relative humidity: 50% at +40°C, provided that no condensation occurs (according to EN 60439-1).
- Wall mounted.
- Metal enclosure.
- Power, pump running, thermal overload and dry running indicator lights.
- Ready for installation of dry running control float or pressure switch (to be ordered separately). Can be equipped with electronic protection module with electrodes.

OPTIONAL ACCESSORIES

- KSL series 24 V level kit. Probe module for protection against dry running (set of three electrodes included in the supply).
- Float.
- Pressure switch.
- VR3/SCA3 three-phase module for overvoltage protection (lightning protector).

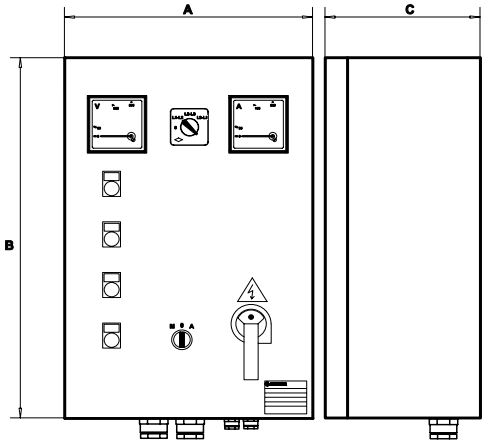

MODEL	RATED VOLTAGE V	RATED POWER kW	RATED POWER HP	RATED CURRENT A	DIMENSIONS A mm	DIMENSIONS B mm	DIMENSIONS C mm	WEIGHT Kg
Q3Y/40-75	3 x 400 V ± 10 %	4-7,5	5,5-10	10 ÷ 16	400	600	200	23
Q3Y/75-92	3 x 400 V ± 10 %	7,5-9,2	10-12,5	16 ÷ 20	400	600	200	23
Q3Y/92-110	3 x 400 V ± 10 %	9,2-11	12,5-15	20 ÷ 25	400	600	200	23
Q3Y/110-150	3 x 400 V ± 10 %	11-15	15-20	22 ÷ 32	400	600	200	23
Q3Y/150-185	3 x 400 V ± 10 %	15-18,5	20-25	28 ÷ 40	400	600	200	23
Q3Y/185-220	3 x 400 V ± 10 %	18,5-22	25-30	36 ÷ 50	500	700	200	32
Q3Y/220-300	3 x 400 V ± 10 %	22-30	30-40	45 ÷ 63	500	700	200	32
Q3Y/300-370	3 x 400 V ± 10 %	30-37	40-50	57 ÷ 75	600	800	250	68
Q3Y/370-450	3 x 400 V ± 10 %	37-45	50-60	70 ÷ 90	600	800	250	80
Q3Y/450-550	3 x 400 V ± 10 %	45-55	60-75	80 ÷ 108	600	900	250	80
Q3Y/550-750	3 x 400 V ± 10 %	55-75	75-100	105 ÷ 138	600p	1300p	300p	109
Q3Y/750-900	3 x 400 V ± 10 %	75-90	100-125	138 ÷ 185	600p	1300p	300p	109
Q3Y/900-1100	3 x 400 V ± 10 %	90-110	125-150	175 ÷ 210	600p	1500p	300p	120
Q3Y/1100-1320	3 x 400 V ± 10 %	110-132	150-180	210 ÷ 260	800p	1700p	400p	130
Q3Y/1320-1600	3 x 400 V ± 10 %	132-160	180-218	250 ÷ 305	800p	1700p	400p	130
Q3Y/1600-2000	3 x 400 V ± 10 %	160-200	218-273	290 ÷ 400	800p	1900p	400p	140
Q3Y/2000-2500	3 x 400 V ± 10 %	200-250	273-340	400 ÷ 460	1000p	1900p	400p	180
Q3Y/2500-3150	3 x 400 V ± 10 %	250-315	340-430	450 ÷ 580	1000p	1900p	400p	180

Dimensions note : P indicates floor mounted control panel.

Three-phase Electric Panel

Q3I Series

APPLICATIONS

- Protection and control of a three-phase surface or submersible electric pump.

SPECIFICATIONS

- Manual control through an Auto/Man selector switch.
- Automatic control through an external enable contact.
- Supply voltage: 3 x 400 V ±10%.
- Frequency: 50/60 Hz.
- 24 V AC low voltage auxiliary circuit.
- Power: 4 to 315 kW.
- Impedance start.
- Short-circuit and overload protection.
- Protection class: IP54.
- Ambient temperature: -5 to +40 °C (according to EN 60439-1).
- Maximum relative humidity: 50% at +40°C, provided that no condensation occurs (according to EN 60439-1).
- Wall mounted.
- Metal enclosure.
- Power, pump running, thermal overload and dry running indicator lights.
- Ready for installation of dry running control float or pressure switch (to be ordered separately). Can be equipped with electronic protection module with electrodes.

OPTIONAL ACCESSORIES

- KSL series 24 V level kit. Probe module for protection against dry running (set of three electrodes included in the supply).
- Float.
- Pressure switch.
- VR3/SCA3 three-phase module for overvoltage protection (lightning protector).

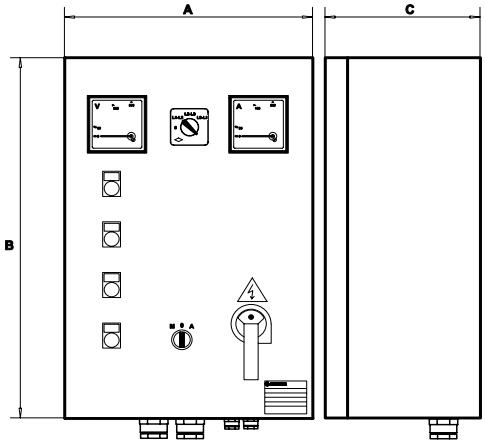

MODEL	RATED VOLTAGE V	RATED POWER kW	RATED POWER HP	RATED CURRENT A	DIMENSIONS A mm	DIMENSIONS B mm	DIMENSIONS C mm	WEIGHT Kg
Q3I/40-75	3 x 400 V ± 10 %	4-7,5	5,5-10	10 ÷ 16	400	600	250	35
Q3I/75-92	3 x 400 V ± 10 %	7,5-9,2	10-12,5	16 ÷ 20	400	600	250	35
Q3I/92-110	3 x 400 V ± 10 %	9,2-11	12,5-15	20 ÷ 25	400	600	250	35
Q3I/110-150	3 x 400 V ± 10 %	11-15	15-20	22 ÷ 32	500	700	250	50
Q3I/150-185	3 x 400 V ± 10 %	15-18,5	20-25	28 ÷ 40	500	700	250	50
Q3I/185-220	3 x 400 V ± 10 %	18,5-22	25-30	36 ÷ 50	500	700	250	50
Q3I/220-300	3 x 400 V ± 10 %	22-30	30-40	45 ÷ 63	500	700	250	65
Q3I/300-370	3 x 400 V ± 10 %	30-37	40-50	57 ÷ 75	500	700	250	65
Q3I/370-450	3 x 400 V ± 10 %	37-45	50-60	70 ÷ 90	600	900	250	65
Q3I/450-550	3 x 400 V ± 10 %	45-55	60-75	80 ÷ 108	600p	1300p	300p	100
Q3I/550-750	3 x 400 V ± 10 %	55-75	75-100	105 ÷ 138	600p	1300p	300p	100
Q3I/750-900	3 x 400 V ± 10 %	75-90	100-125	138 ÷ 185	600p	1500p	300p	100
Q3I/900-1100	3 x 400 V ± 10 %	90-110	125-150	175 ÷ 210	800p	1700p	400p	100
Q3I/1100-1320	3 x 400 V ± 10 %	110-132	150-180	210 ÷ 260	800p	1700p	400p	150
Q3I/1320-1600	3 x 400 V ± 10 %	132-160	180-218	250 ÷ 305	800p	1700p	400p	150
Q3I/1600-2000	3 x 400 V ± 10 %	160-200	218-273	290 ÷ 400	800p	1900p	400p	160
Q3I/2000-2500	3 x 400 V ± 10 %	200-250	273-340	400 ÷ 460	1000p	1900p	400p	180
Q3I/2500-3150	3 x 400 V ± 10 %	250-315	340-430	450 ÷ 580	1000p	1900p	400p	200

Dimensions note : P indicates floor mounted control panel.

Three-phase Electric Panel

Q3A Series

APPLICATIONS

- Protection and control of a three-phase surface or submersible electric pump.

SPECIFICATIONS

- Manual control through an Auto/Man selector switch.
- Automatic control through an external enable contact.
- Supply voltage: 3 x 400 V ±10%.
- Frequency: 50/60 Hz.
- 24 V AC low voltage auxiliary circuit.
- Power: 4 to 315 kW.
- Starting autotransformer.
- Short-circuit and overload protection.
- Protection class: IP54.
- Ambient temperature: -5 to +40 °C (according to EN 60439-1).
- Maximum relative humidity: 50% at +40°C, provided that no condensation occurs (according to EN 60439-1).
- Wall mounted.
- Metal enclosure.
- Power, pump running, thermal overload and dry running indicator lights.
- Ready for installation of dry running control float or pressure switch (to be ordered separately). Can be equipped with electronic protection module with electrodes.

OPTIONAL ACCESSORIES

- KSL series 24 V level kit. Probe module for protection against dry running (set of three electrodes included in the supply).
- Float.
- Pressure switch.
- VR3/SCA3 three-phase module for overvoltage protection (lightning protector).

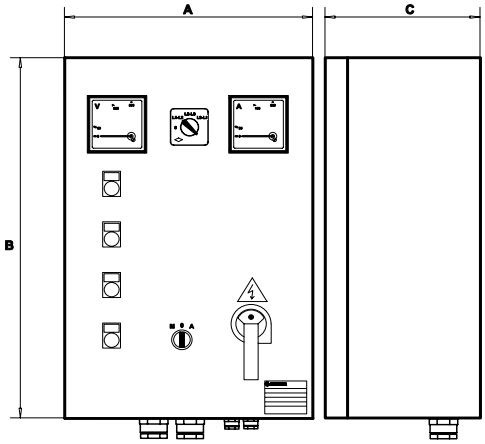

MODEL	RATED VOLTAGE V	RATED POWER kW	RATED POWER HP	RATED CURRENT A	DIMENSIONS A mm	DIMENSIONS B mm	DIMENSIONS C mm	WEIGHT Kg
Q3A/40-75	3 x 400 V ± 10 %	4-7,5	5,5-10	10 ÷ 16	500	700	250	50
Q3A/75-92	3 x 400 V ± 10 %	7,5-9,2	10-12,5	16 ÷ 20	500	700	250	50
Q3A/92-110	3 x 400 V ± 10 %	9,2-11	12,5-15	20 ÷ 25	500	700	250	50
Q3A/110-150	3 x 400 V ± 10 %	11-15	15-20	22 ÷ 32	500	700	250	50
Q3A/150-185	3 x 400 V ± 10 %	15-18,5	20-25	28 ÷ 40	500	700	250	50
Q3A/185-220	3 x 400 V ± 10 %	18,5-22	25-30	36 ÷ 50	500	700	250	50
Q3A/220-300	3 x 400 V ± 10 %	22-30	30-40	45 ÷ 63	600	900	300	80
Q3A/300-370	3 x 400 V ± 10 %	30-37	40-50	57 ÷ 75	600	900	300	80
Q3A/370-450	3 x 400 V ± 10 %	37-45	50-60	70 ÷ 90	600p	1300p	300p	90
Q3A/450-550	3 x 400 V ± 10 %	45-55	60-75	80 ÷ 108	600p	1500p	300p	120
Q3A/550-750	3 x 400 V ± 10 %	55-75	75-100	105 ÷ 138	600p	1500p	300p	120
Q3A/750-900	3 x 400 V ± 10 %	75-90	100-125	138 ÷ 185	600p	1700p	400p	150
Q3A/900-1100	3 x 400 V ± 10 %	90-110	125-150	175 ÷ 210	800p	1900p	400p	150
Q3A/1100-1320	3 x 400 V ± 10 %	110-132	150-180	210 ÷ 260	800p	1900p	400p	200
Q3A/1320-1600	3 x 400 V ± 10 %	132-160	180-218	250 ÷ 305	800p	1900p	400p	200
Q3A/1600-2000	3 x 400 V ± 10 %	160-200	218-273	290 ÷ 400	800p	1900p	400p	230
Q3A/2000-2500	3 x 400 V ± 10 %	200-250	273-340	400 ÷ 460	1000p	1900p	400p	230
Q3A/2500-3150	3 x 400 V ± 10 %	250-315	340-430	450 ÷ 580	1000p	1900p	400p	250

Dimensions note : P indicates floor mounted control panel.

CB-Q3A-en_c_te

Three-phase Electric Panel

Q3SF Series

APPLICATIONS

- Protection and control of a three-phase surface or submersible electric pump.

SPECIFICATIONS

- Manual control through an Auto/Man selector switch.
- Automatic control through an external enable contact.
- Supply voltage: 3 x 400 V ±10%.
- Frequency: 50/60 Hz.
- 24 V AC low voltage auxiliary circuit.
- Power: 5,5 to 110 kW.
- Softstart with torque control.
- Protection class: IP54.
- Ambient temperature: -5 to +40 °C
- Maximum relative humidity: 50% at +40°C, provided that no condensation occurs (according to EN 60439-1).
- Wall mounted.
- Metal enclosure.
- Dry running indicator light.
- Power - pump running - malfunction LEDs on starter keypanel.
- ON/OFF selector switch for activation of by-pass contactor.
- Ready for installation of dry running control float or pressure switch (to be ordered separately). Can be equipped with electronic protection module with electrodes.

Protections against phase failure / phase sequence / frequency out of limits on power supply line.
Low-voltage protection on auxiliary circuits.
Protection against starter overtemperature / overload / malfunction.
Protection against overload / locked rotor / current asymmetry on motor side.
Short-circuit protection on inputs and outputs.
RS232 interface for remote control and RS485 for use of remote keypanel.
Incorporated by-pass contactor.

OPTIONAL ACCESSORIES

- KSL series 24 V level kit. Probe module for protection against dry running (set of three electrodes included in the supply).
- Float.
- Pressure switch.
- VR3/SCA3 three-phase module for overvoltage protection (lightning protector).

STATIC STARTER CHARACTERISTICS

- Static starter for gradual start-up/ shutdown, featuring: keypanel with liquid crystal display showing voltage, absorbed current, cos φ, operating hours, number of starts, last twenty messages on system status (events / alarms).

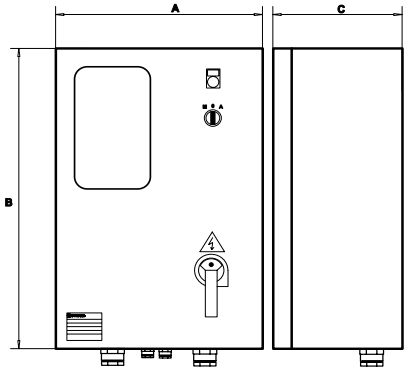

MODEL	RATED VOLTAGE	RATED POWER		RATED CURRENT	DIMENSIONS			WEIGHT
					A	B	C	
	V	kW	HP	A	mm	mm	mm	Kg
Q3SF 75	3 x 400 V ± 10 %	5,5 - 7,5	7,5 -10	8,5 ÷ 17	400	600	250	35
Q3SF 150	3 x 400 V ± 10 %	9,2 - 15	12,5 - 20	15 ÷ 30	500	700	250	40
Q3SF 220	3 x 400 V ± 10 %	18,5 - 22	25 - 30	28 ÷ 45	500	700	250	40
Q3SF 300	3 x 400 V ± 10 %	30	40	42 ÷ 60	600	900	300	90
Q3SF 370	3 x 400 V ± 10 %	37	50	55 ÷ 75	600	900	300	90
Q3SF 450	3 x 400 V ± 10 %	45	60	70 ÷ 85	600	900	300	90
Q3SF 550	3 x 400 V ± 10 %	55	75	80 ÷ 110	600	900	300	90
Q3SF 590	3 x 400 V ± 10 %	59	80	105 ÷ 125	600	900	300	90
Q3SF 750	3 x 400 V ± 10 %	75	100	120 ÷ 142	600p	1700p	400p	120
Q3SF 900	3 x 400 V ± 10 %	90	125	135 ÷ 190	600p	1700p	400p	120
Q3SF 1100	3 x 400 V ± 10 %	110	150	185 ÷ 245	600p	1700p	400p	120

Dimensions note : P indicates floor mounted control panel.

Level Control Panel

APPLICATIONS

- Accessory for electric pump control panels, suitable for tank filling or drainage applications or for activation of audible or visual alarms.

QCL5 Series

SPECIFICATIONS

- Automatic control through probes.
- Supply voltage:
  1 x 230 V ±10% or 1 x 24 V ±10%.
- Frequency: 50/60 Hz.
- Voltage to probes:
  15 V AC at 0,5 mA max.
- Switch contact 48 V AC at 3 A max (250 W max).
- Protection class: IP55.
- Ambient temperature: -5 to +40 °C (according to EN 60439-1).
- Maximum relative humidity: 50% at +40°C, provided that no condensation occurs (according to EN 60439-1).
- Wall mounted.
- Plastic enclosure.
- Electrodes suitable for water at a maximum temperature of 40°C.
- Set of three electrodes included in the supply.

OPTIONAL ACCESSORIES

- Drop cable with circular cross section.

For connection of the electrodes to the panel we recommend the following cross sections:

LENGHT m		CABLE SECTION mm^2
0	50	0,5
50	100	0,75
100	200	1,0
200	400	2,5

CB-CASEL-en_b_te

Three-pole cables can be used for short lenghts.
Otherwise we recommend the use of unipolar cables placed at suitable distance from each other to prevent the capacitive effect of the cable from interfering with the proper operation of the electronic module.

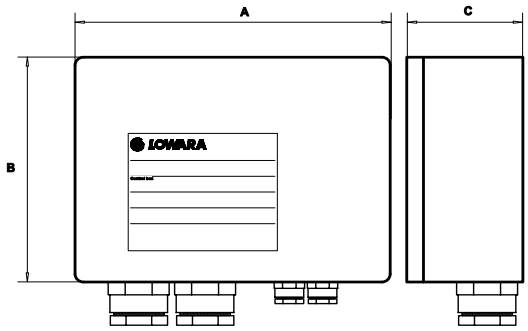

TYPE	POWER SUPPLY			CONTACT			DIMENSIONS	WEIGHT
	VOLTAGE	FREQUENCY	POWER	TYPE	RANGE		A x B x C	
	V	Hz	W		V	A	mm	Kg
QCL5/24	1 x 24	50/60	2	NO-C-NC	48	3	90 x 130 x 60	0,5
QCL5/230	1 x 230	50/60	2					

CB-QCL5-en_a_te

Kit 24 V Level Probe

APPLICATIONS

- Accessory for electric panels.

KSL Series

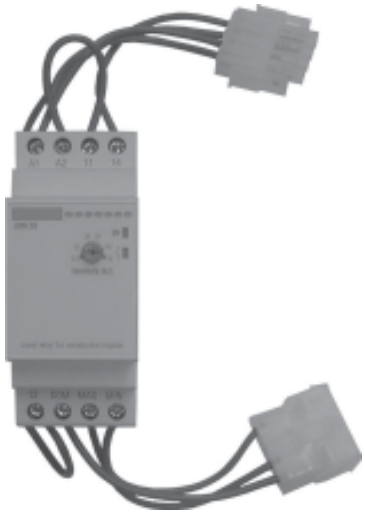

SPECIFICATIONS

- Electronic module for use of probes as protection against dry running.
- Supply voltage:
  1 x 24 V ±10% for model SLD/24.
- Frequency: 50/60 Hz.
- Absorbed power: 3,5 VA max.
- Voltage to probes:
  7,5 V AC at 0,4 mA max.
- Switch contact 24 V AC at 5 A max (250 W max).
- Designed for installation on Lowara electric panels featuring DIN bar.
- Electrodes suitable for water at a maximum temperature of 60°C.

CONSTRUCTION CHARACTERISTICS

- Module made of plastic material with DIN bar attachment.
- Cables with quick plug-in connectors.
- Set of three electrodes included in the supply.
- Electrodes with nylon 6 body, stainless steel sensitive element brass washer and nitrile rubber seal.

OPTIONAL ACCESSORIES

- Drop cable with circular cross section.

For connection of the electrodes to the panel we recommend the following cross sections:

LENGHT m		CABLE SECTION mm^2
0	50	0,5
50	100	0,75
100	200	1,0
200	400	2,5

CB-CASEL-en_b_te

Three-pole cables can be used for short lenghts.
Otherwise we recommend the use of unipolar cables placed at suitable distance from each other to prevent the capacitive effect of the cable from interfering with the proper operation of the electronic module.

TYPE	POWER SUPPLY			CONTACT			DIMENSIONS	WEIGHT	PANELS
	MAIN		POWER	TYPE	RANGE		A x B x C		
	V		VA		V~	A	mm	Kg	
KIT KSL/24	1x24	50/60 Hz	3,5	N0-C-NC	250	8	90 x 36 x 60	0,5	QSCS-QM-QTD-Q3D-Q3Y-Q3A-Q3I-Q3SF

CB-SLD-en_b_te

Lightning Protection

APPLICATIONS
- Accessory for electric panels.

DPF Series

SPECIFICATIONS
- Varistor for overvoltage protection of single-phase lines. To be connected between the phase and neutral conductor.
- Operating voltage: 460 V AC.
- Maximum varistor voltage: 750 V with 100 A peak current.

VR Series

SPECIFICATIONS
- Varistors for overvoltage protection of three-phase lines.
- To be connected between the phases (VR3 model).
- Operating voltage: 460 V AC.
- Maximum varistor voltage: 750 V with 100 A peak current.
- Designed for installation on Lowara electric panels featuring DIN bar.

SCA3 Series

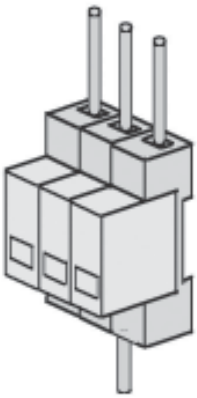

SPECIFICATIONS
- Lightning arresters for overvoltage protection of three-phase lines. To be connected between the phases and the heart conductor,
- Operating voltage: 500 V AC.
- Maximum varistor voltage: 2,5 kW with 40 kA peak current.
- Designed for installation on Lowara electric panels featuring DIN bar.

TYPE	VOLTAGE V	PANELS
DPF	1 x 220-240 50/60 Hz	QSM - QSC - QSCS - QPC
KIT VR1	1 x 220-230 50/60 Hz	QM - QDRM - QDRM2 - QDRMC - QDRMC2
KIT VR3	3 x 400 50/60 Hz	QTD - QDR - QDR2 - Q3D
KIT SCA 3	3 x 400 50/60 Hz	Q3Y-Q3A-Q3I-Q3SF-Q3D

CB-VR-en_c_te

COOLING SHROUDS

01890_B_DD

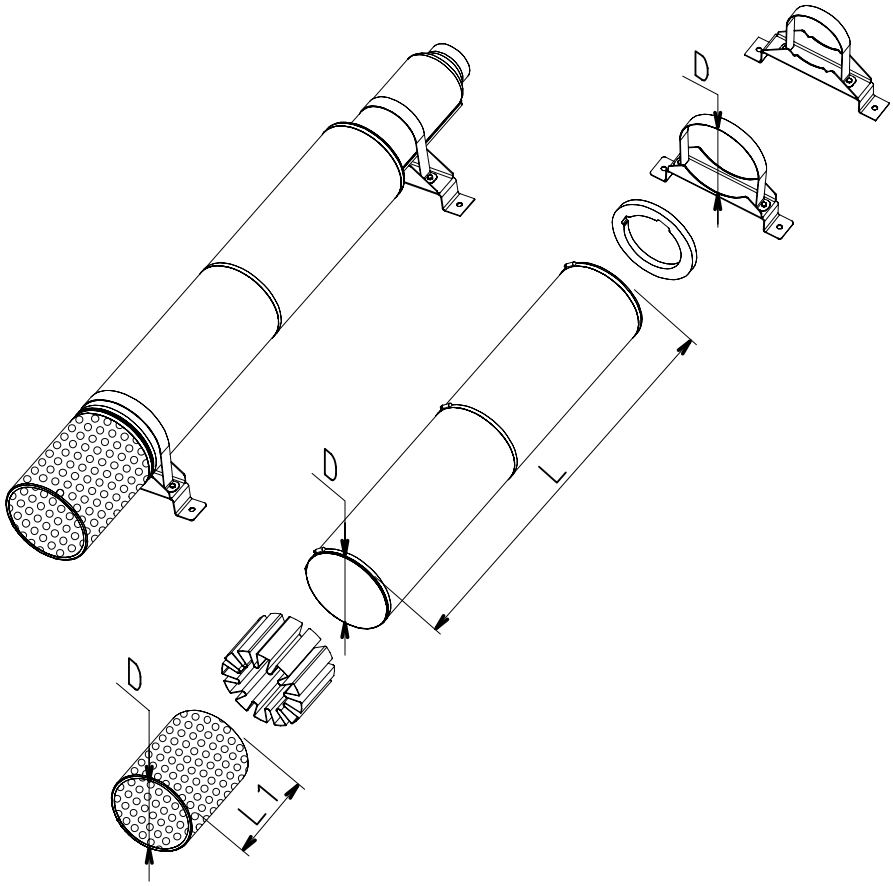

COOLING SHROUDS
6Z8 PUMP SERIES
6", 8" and 10" MOTORS COMBINATION TABLE

PUMP TYPE	MOTOR TYPE				COOLING SET SHROUD (D x L)	COOLING SET FILTER (D x L1)	COOLING SET BRACKETS (D)
	L6C	L6W	L8W	L10W			
6Z855 6Z875	5,5	5,5			D225X1000	D225X192	D225 - 2PZ
	7,5	7,5					
	9,3	9,3					
	11	11					
	-	13					
	15	15			D225X1250	D225X192	D225 - 2PZ
	18,5	18,5					
	22	22					
	-	26			D225X1500	D225X192	D225 - 3PZ
	30	30					
	37	37					
6Z895 6Z8125	7,5	7,5			D256X1000	D256X325	D256 - 2PZ
	11	11					
	-	13					
	15	15			D256X1250	D256X325	D256 - 2PZ
	18,5	18,5					
	22	22					
	-	26			D256X1500	D256X325	D256 - 3PZ
	30	30					
	37	37					
6Z855 6Z875			30		D256X1500	D256X325	D256 - 3PZ
			37				
			45				
			52				
			55				
			60		D256X1750	D256X325	D256 - 3PZ
			67				
			75				
			83		D256X2000	D256X325	D256 - 3PZ
			93				
6Z895 6Z8125			30		D285X1500	D285X385	D285 - 3PZ
			37				
			45				
			52				
			55				
			60		D285X1750	D285X385	D285 - 3PZ
			67				
			75				
			83		D285X2000	D285X385	D285 - 3PZ
			93				
6Z855 6Z875				93	D285X2250	D285X385	D285 - 3PZ
				110			
				130			
				150			
6Z895 6Z8125				93	D330X2250	D330X385	D330 - 3PZ
				110			
				130			
				150			

Z8_kit-raf60-en_b_ta

TECHNICAL APPENDIX

SUBMERSIBLE ELECTRIC PUMP INSTALLATION DIAGRAM

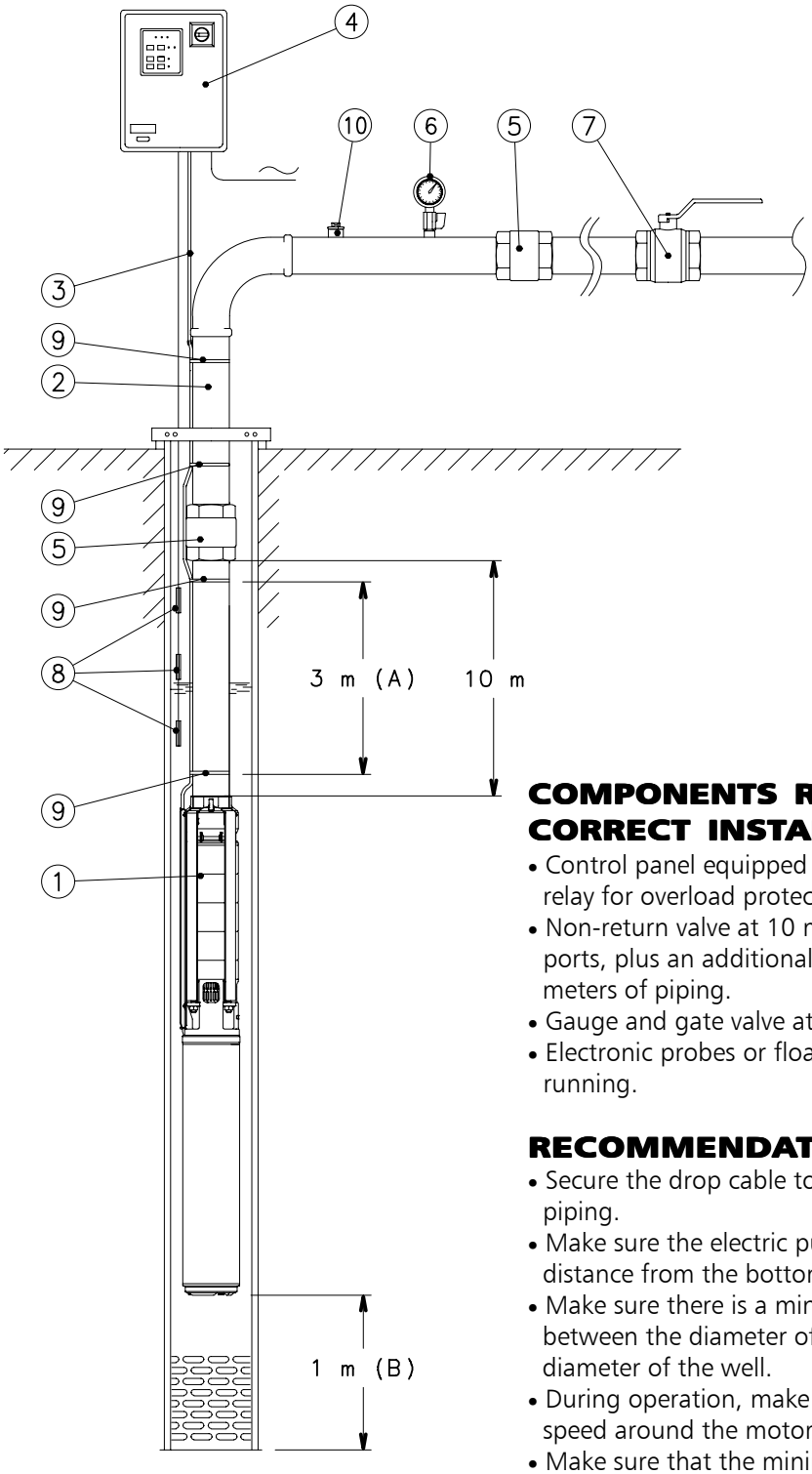

1 - Submersible electric pump.
2 - Delivery pipe.
3 - Drop cable.
4 - Control panel.
5 - Non-return valve.
6 - Gauge.
7 - On/off valve.
8 - Level sensors for protection against dry running.
9 - Cable clamp.
10 - Electric pump bleed/priming cap.

A - Distance between the clamps that secure the drop cable to the delivery pipe.
B - Distance from the bottom of the well to the electric pump.

COMPONENTS REQUIRED FOR CORRECT INSTALLATION

- Control panel equipped with a main switch and thermal relay for overload protection.
- Non-return valve at 10 meters' distance from the delivery ports, plus an additional non-return valve every 30÷50 meters of piping.
- Gauge and gate valve at well mouth.
- Electronic probes or floats for protection against dry running.

RECOMMENDATIONS

- Secure the drop cable to the pipe every 2÷3 meters of piping.
- Make sure the electric pump is installed at a safe distance from the bottom of the well.
- Make sure there is a minimum distance of 3 mm between the diameter of the pump and the internal diameter of the well.
- During operation, make sure that the water circulation speed around the motor is at least 8 cm/sec.
- Make sure that the minimum dynamic level of the water in the well is at least 1 m above the pump's delivery port.

01904_B_SC

EXAMPLE OF INSTALLATION OF A SUBMERSIBLE ELECTRIC PUMP CONTROLLED BY AN INVERTER (HYDROVAR®)

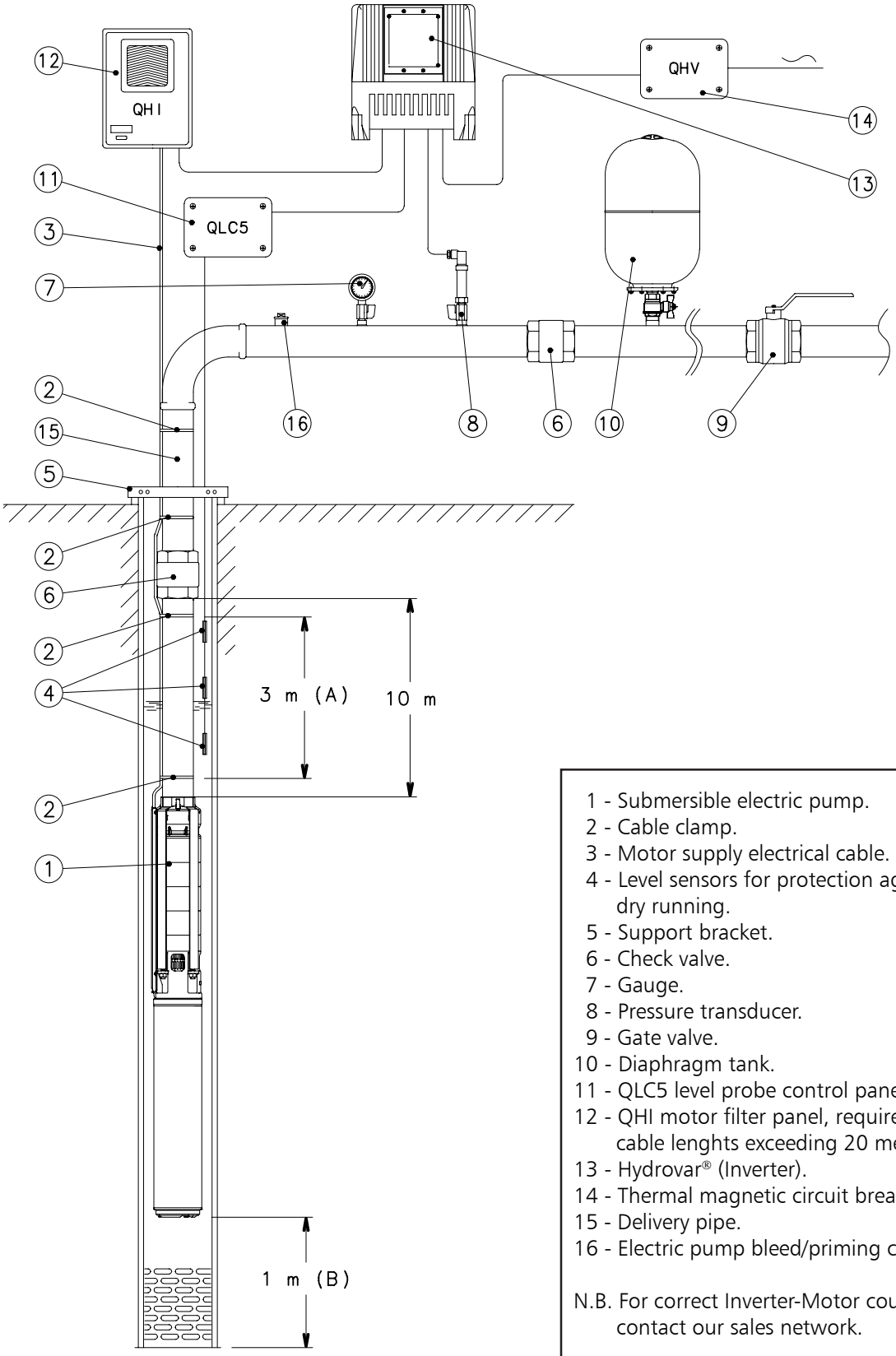

1 - Submersible electric pump.
2 - Cable clamp.
3 - Motor supply electrical cable.
4 - Level sensors for protection against dry running.
5 - Support bracket.
6 - Check valve.
7 - Gauge.
8 - Pressure transducer.
9 - Gate valve.
10 - Diaphragm tank.
11 - QLC5 level probe control panel.
12 - QHI motor filter panel, required for cable lenghts exceeding 20 meters.
13 - Hydrovar® (Inverter).
14 - Thermal magnetic circuit breaker (QHV).
15 - Delivery pipe.
16 - Electric pump bleed/priming cap.

N.B. For correct Inverter-Motor coupling, contact our sales network.

01905_C_SC

L6C MOTOR SERIES

TABLE OF POWER REDUCTION COEFFICIENTS WITH INCREASED WATER TEMPERATURE

MOTOR TYPE	RATED POWER kW	TEMPERATURE °C					
		35	40	45	50	55	60
L6C	all models	1	0,95	0,8	0,75	0,7	0,6

L6c-derating-50-en_b_te

EXAMPLE:
A 7,5 kW L6C motor is to be used in 45°C water.
Motor power at 50 °C = 7,5 x 0,8 = 6 kW

L6W - L8W - L10W MOTOR SERIES

TABLE OF POWER REDUCTION COEFFICIENTS WITH INCREASED WATER TEMPERATURE

MOTOR TYPE	RATED POWER kW	TEMPERATURE °C							
		25	30	35	40	45	50	55	60
STD	all models	1	1	0,75	-	-	-	-	-
HT	all models	1	1	1	1	1	0,85	0,75	0,65

(1) Standard winding for water temperature up to 35 °C.

(2) Special winding for water temperature from 35 °C to 60 °C.

Lw-derating-en_a_te

EXAMPLE:
A 15 kW L6W motor is to be used in 35°C water.
Motor power at 35 °C = 15 x 0,75 = 11,25 kW

SELECTING CABLE CROSS-SECTIONS FOR SUBMERSIBLE MOTORS

To select the cross-section of power cables for submersible pumps, consult the tables shown below. In these tables, the maximum lenghts of the power cable for each cross-section are shown for each motor and next to the various input voltage ratings.
Therefore, to find the required cable cross-section, simply read off the maximum permitted lenghts for each cross-section next to the selected motor and required input voltage.

E.g.:
A 100 m long power cable must be matched with a 230V L4C07M236 motor.
To determine the cross-section of the cable, simply move along the row of the 230V motor until you find the maximum lenght of 100 m or immediately above it and then read off the corresponding cross-section in that column.
In this case, the 4 mm^2 cable is selected.

N.B.: the tables include specific data (current and power factor) for each motor and voltage rating based on a maximum voltage drop of 4% (HD 384.5), a maximum cable temperature of 90°C, water installation similar to air installation at a temperature of 30°C.

CABLE TYPES

SECTION	THREE CORE FLAT					FOUR CORE FLAT					SINGLE CORE ROUND			FOUR CORE ROUND		
	Hmin	Lmin	Hmax	Lmax	Weight	Hmin	Lmin	Hmax	Lmax	Weight	Dmin	Dmax	Weight	Dmin	Dmax	Weight
mm^2	mm	mm	mm	mm	kg/km	mm	mm	mm	mm	kg/km	mm	mm	kg/km	mm	mm	kg/km
4	8	19,2	9	20,8	250	8	25,2	9	26,8	395	6,5	7,5	92	14	16,1	360
6	8	19,2	9	20,8	325	8	25,2	9	26,8	470	7,4	8	118	15,7	18	475
10	8	19,2	9	20,8	535	8	25,2	9	26,8	710	8,6	10	183	20,9	23,9	836
16	-	-	-	-	-	-	-	-	-	-	9,6	11	251	23,8	27,1	1145
25	-	-	-	-	-	-	-	-	-	-	11	13	362	28,9	32,9	1716
35	-	-	-	-	-	-	-	-	-	-	12,5	14,5	497	-	-	-
50	-	-	-	-	-	-	-	-	-	-	15	17	669	-	-	-
70	-	-	-	-	-	-	-	-	-	-	17,5	19,5	901	-	-	-
95	-	-	-	-	-	-	-	-	-	-	20,5	22,5	1141	-	-	-
120	-	-	-	-	-	-	-	-	-	-	22	24,4	1435	-	-	-
150	-	-	-	-	-	-	-	-	-	-	25,2	28,3	1795	-	-	-
185	-	-	-	-	-	-	-	-	-	-	27,6	31	2156	-	-	-
240	-	-	-	-	-	-	-	-	-	-	30,6	34,5	2760	-	-	-

L-cavi-en_a_td

L6C, 60 Hz: SIZING OF ETHYLENE-PROPILENE (EPR) CABLES DOL (DIRECT ON LINE) STARTING

MOTOR TYPE THREE-PHASE	RATED POWER Kw	RATED POWER HP	RATED VOLTAGE V	Cos φ	CURRENT AT S.F. A	VOLTAGE DROP %	Cable cross section: 4G x …mm²								
							mm²	4	6	10	16	25	35	50	70
							A max	42	54	75	100	127	158	192	246
							Maximum lenght in metres								
L6C40T236	4	5,5	230	0,80	19,0	4		63	96	167	260	393	539		
L6C40T386			380	0,80	11,5			179	268	460					
L6C40T405			460	0,80	9,5			264	394						
L6C55T236	5,5	7,5	230	0,80	26,6			43	67	117	184	279	384	527	
L6C55T386			380	0,80	16,1			125	189	327	509				
L6C55T405			460	0,80	13,1			189	284	488	758				
L6C75T236	7,5	10	230	0,81	33,0			33	52	92	146	222	306	421	
L6C75T386			380	0,81	20,0			98	149	258	404				
L6C75T405			460	0,81	16,5			146	221	381	594				
L6C93T236	9,3	12,5	230	0,80	41,2			25	40	73	116	178	245	338	457
L6C93T386			380	0,80	25,0			77	118	207	325	492			
L6C93T405			460	0,80	20,6			116	177	307	479				
L6C110T236	11	15	230	0,82	46,6			-	33	62	99	153	212	294	399
L6C110T386			380	0,82	28,2			-	101	178	281	427			
L6C110T405			460	0,82	23,3			-	151	264	414				
L6C150T236	15	20	230	0,83	61,6			-	-	43	72	112	157	219	299
L6C150T386			380	0,83	37,3			-	72	130	207	317	438		
L6C150T405			460	0,83	30,8			-	109	194	307	468			
L6C185T236	18,5	25	230	0,80	80,0			-	-	-	54	86	121	169	232
L6C185T386			380	0,80	48,4			-	53	99	161	248	343	474	
L6C185T405			460	0,80	40			-	83	150	240	367	506		
L6C220T236	22	30	230	0,77	99,6			-	-	-	42	68	97	137	187
L6C220T386			380	0,77	60,2			-	-	79	130	202	280	387	523
L6C220T405			460	0,77	49,8			-	65	120	195	300	414		
L6C300T386	30	40	380	0,82	75,0			-	-	55	94	150	211	296	405
L6C300T405			460	0,82	62,0			-	-	87	144	225	314	438	
L6C370T386	37	50	380	0,88	90,0			-	-	-	70	114	164	233	325
L6C370T405			460	0,88	77,0			-	-	-	104	166	237	335	463

Exposed cable laid at a temperature of 30°C, maximum conductor temperature of 90°C

l6c_cavi-60-en_c_te

L6C, 60 Hz: SIZING OF ETHYLENE-PROPILENE (EPR) CABLES Y/Δ (STAR / DELTA) STARTING

MOTOR TYPE THREE-PHASE	RATED POWER Kw	RATED POWER HP	RATED VOLTAGE V	Cos φ	RATED CURRENT A	VOLTAGE DROP %	Cable cross section: 4G x …mm² + 3 x …mm²								
							mm²	4	6	10	16	25	35	50	70
							A max*	73	94	130	173	220	274	333	426
							Maximum lenght in metres								
L6C40T236	4	5,5	230	0,80	19,0	4		114	170	292	453				
L6C40T386			380	0,80	11,5			314	468						
L6C40T405			460	0,80	9,5			460							
L6C55T236	5,5	7,5	230	0,80	26,6			80	120	207	323	487			
L6C55T386			380	0,80	16,1			223	333						
L6C55T405			460	0,80	13,1			333	497						
L6C75T236	7,5	10	230	0,81	33,0			62	95	164	257	388	533		
L6C75T386			380	0,81	20,0			176	264	453					
L6C75T405			460	0,81	16,5			260	389						
L6C93T236	9,3	12,5	230	0,80	41,2			49	76	132	207	313	430		
L6C93T386			380	0,80	25,0			141	212	365	568				
L6C93T405			460	0,80	20,6			209	314	538					
L6C110T236	11	15	230	0,82	46,6			42	65	113	178	271	373	514	
L6C110T386			380	0,82	28,2			121	183	316	492				
L6C110T405			460	0,82	23,3			179	270	464					
L6C150T236	15	20	230	0,83	61,6			29	46	83	132	202	278	385	522
L6C150T386			380	0,83	37,3			88	135	234	367	556			
L6C150T405			460	0,83	30,8			132	200	345	540				
L6C185T236	18,5	25	230	0,80	80,0			-	34	64	103	158	218	301	407
L6C185T386			380	0,80	48,4			67	105	184	289	439			
L6C185T405			460	0,80	40			102	156	272	426				
L6C220T236	22	30	230	0,77	99,6			-	-	50	83	128	178	246	332
L6C220T386			380	0,77	60,2			53	84	150	238	361	496		
L6C220T405			460	0,77	49,8			82	127	223	351	532			
L6C300T386	30	40	380	0,82	75,0			-	60	111	178	274	379	524	
L6C300T405			460	0,82	62,0			58	93	166	264	404	558		
L6C370T386	37	50	380	0,88	90,0			-	44	84	137	213	299	418	574
L6C370T405			460	0,88	77,0			40	66	122	197	305	425		

Exposed cable laid at a temperature of 30°C, maximum conductor temperature of 90°C

l6c_cavi-SD-60_a_te

*A max is the maximum rated current of the motor

L6W, 60 Hz: SIZING OF ETHYLENE-PROPILENE (EPR) CABLES DOL (DIRECT ON LINE) STARTING

MOTOR TYPE THREE-PHASE	RATED POWER Kw	RATED POWER HP	RATED VOLTAGE V	Cos φ AT S.F.	CURRENT AT S.F. A	VOLTAGE DROP %	Cable cross section: 4G x …mm²								
							mm2	4	6	10	16	25	35	50	70
							A max	42	54	75	100	127	158	192	246
							Maximum lenght in metres								
L6W40T236	4	5,5	230	0,83	19,0	4		61	93	161	252	382	525		
L6W40T386			380	0,87	11,2			170	255	438					
L6W40T405			460	0,87	9,2			253	379						
L6W55T236	5,5	7,5	230	0,79	26,4			44	68	120	188	284	390		
L6W55T386			380	0,84	15,1			128	194	334	521				
L6W55T405			460	0,85	12,2			192	289	497					
L6W75T236	7,5	10	230	0,82	33,6			32	50	89	141	216	297	411	
L6W75T386			380	0,86	19,4			96	146	253	396				
L6W75T405			460	0,87	15,8			143	216	374	585				
L6W93T236	9,3	12,5	230	0,82	41,3			24	39	71	113	174	241	333	451
L6W93T386			380	0,86	23,8			76	117	204	321	489			
L6W93T405			460	0,87	19,5			114	173	301	472				
L6W110T236	11	15	230	0,83	47,9			-	32	59	95	147	205	284	386
L6W110T386			380	0,87	27,8			62	97	172	271	414			
L6W110T405			460	0,87	22,8			95	146	256	403	614			
L6W130T236	13	17,5	230	0,81	57,4			-	-	48	79	124	172	239	325
L6W130T386			380	0,85	32,9			52	82	146	232	354	490		
L6W130T405			460	0,88	26,4			80	123	217	343	524			
L6W150T236	15	20	230	0,84	62,5			-	-	42	70	109	153	214	293
L6W150T386			380	0,87	36,6			44	70	127	203	312	433		
L6W150T405			460	0,86	30,5			68	107	190	301	460			
L6W185T236	18,5	25	230	0,82	78,2			-	-	-	54	86	122	171	235
L6W185T386			380	0,86	45,1			-	55	101	164	253	351	489	
L6W185T405			460	0,87	36,7			-	85	153	245	376	522		
L6W220T236	22	30	230	0,82	91,9			-	-	-	44	71,1	102	144	198
L6W220T386			380	0,85	53,8			-	44	83	136	211	295	411	
L6W220T405			460	0,84	45,0			-	68	125	202	312	433	601	
L6W260T236	26	35	230	0,76	117			-	-	-	-	56	81	115	159
L6W260T386			380	0,81	66,5			-	-	66	110	173	243	338	461
L6W260T405			460	0,83	53,7			-	-	103	168	261	363	505	
L6W300T236	30	40	230	0,82	126			-	-	-	-	47,2	69,7	100	141
L6W300T386			380	0,86	72,6			-	-	55	94	150	212	298	410
L6W300T405			460	0,86	61,0			-	-	85	141	221	310	433	594
L6W370T386	37	50	380	0,82	95,9			-	-	-	68	112	160	226	313
L6W370T405			460	0,84	77,1			-	-	-	108	172	244	343	471

Exposed cable laid at a temperature of 30°C, maximum conductor temperature of 90°C

l6w_cavi-60_b_te

L6W, 60 Hz: SIZING OF ETHYLENE-PROPILENE (EPR) CABLES Y/Δ (STAR / DELTA) STARTING

MOTOR TYPE THREE-PHASE	RATED POWER Kw	RATED POWER HP	RATED VOLTAGE V	Cos φ AT S.F.	CURRENT AT S.F. A	VOLTAGE DROP %	Cable cross section: 4G x …mm² + 3 x …mm²								
							mm²	4	6	10	16	25	35	50	70
							A max*	73	94	130	173	220	274	333	426
							Maximum lenght in metres								
L6W40T236	4	5,5	230	0,83	19,0	4		110	165	282	440				
L6W40T386			380	0,87	11,2			297	445						
L6W40T405			460	0,87	9,2			441							
L6W55T236	5,5	7,5	230	0,79	26,4			81	123	211	329	496			
L6W55T386			380	0,84	15,1			227	340	582					
L6W55T405			460	0,85	12,2			338	505						
L6W75T236	7,5	10	230	0,82	33,6			61	92	160	249	378	519		
L6W75T386			380	0,86	19,4			172	258	443					
L6W75T405			460	0,87	15,8			254	380						
L6W93T236	9,3	12,5	230	0,82	41,3			48	74	129	202	307	421		
L6W93T386			380	0,86	23,8			139	209	360	562				
L6W93T405			460	0,87	19,5			204	307	528					
L6W110T236	11	15	230	0,83	47,9			40	62	109	172	261	360	496	
L6W110T386			380	0,87	27,8			116	176	304	476				
L6W110T405			460	0,87	22,8			174	261	450					
L6W130T236	13	17,5	230	0,81	57,4			33	51	92	145	221	304	419	567
L6W130T386			380	0,85	32,9			99	151	261	409				
L6W130T405			460	0,88	26,4			147	222	384					
L6W150T236	15	20	230	0,84	62,5			28	45	81	128	197	272	377	512
L6W150T386			380	0,87	36,6			86	131	229	359	548			
L6W150T405			460	0,86	30,5			129	195	338	529				
L6W185T236	18,5	25	230	0,82	78,2			21	35	64	103	158	219	304	412
L6W185T386			380	0,86	45,1			68	106	186	293	447			
L6W185T405			460	0,87	36,7			104	159	276	434				
L6W220T236	22	30	230	0,82	91,9			-	28	53	86	133	185	257	350
L6W220T386			380	0,85	53,8			56	88	155	246	376	519		
L6W220T405			460	0,84	45,0			85	131	230	362	552			
L6W260T236	26	35	230	0,76	117			-	-	41	69	108	151	209	283
L6W260T386			380	0,81	66,5			44	71	128	205	313	432		
L6W260T405			460	0,83	53,7			69	109	193	305	464			
L6W300T236	30	40	230	0,82	126			-	-	35	59	94	132	185	253
L6W300T386			380	0,86	72,6			37	60	110	177	273	379	527	
L6W300T405			460	0,86	61,0			57	90	162	258	396	549		
L6W370T386	37	50	380	0,82	95,9			-	-	83	135	210	293	407	553
L6W370T405			460	0,84	77,1			-	69	127	205	316	438		

Exposed cable laid at a temperature of 30°C, maximum conductor temperature of 90°C

l6w_cavi-SD-60_b_te

*A max is the maximum rated current of the motor

L8W, 60 Hz: SIZING OF ETHYLENE-PROPILENE (EPR) CABLES DOL (DIRECT ON LINE) STARTING

MOTOR TYPE THREE-PHASE	RATED POWER Kw	RATED POWER HP	RATED VOLTAGE V	Cos φ AT S.F.	CURRENT AT S.F. A	VOLTAGE DROP %	Cable cross section: 4G x …mm²									
							mm2	10	16	25	35	50	70	95	120	150
							A max	75	100	127	158	192	246	298	346	399
							Maximum lenght in metres									
L8W300T386	30	40	380	0,83	78,0	4		-	89	142	201	282	387	485		
L8W300T405			460	0,83	64,4			81	136	213	299	418				
L8W370T386	37	50	380	0,83	96,1			-	68	110	158	224	310	391	478	
L8W370T405			460	0,83	79,4			-	105	168	238	335	460			
L8W450T386	45	60	380	0,85	114			-	52	87	127	182	255	324	398	
L8W450T405			460	0,85	94,3			-	82	134	193	273	379	479		
L8W520T386	52	70	380	0,83	134			-	-	-	106	154	217	276	339	442
L8W520T405			460	0,83	110			-	-	112	163	232	324	409	501	
L8W550T386	55	75	380	0,85	139			-	-	-	99	144	205	262	323	426
L8W550T405			460	0,85	115			-	-	104	152	219	306	389	478	
L8W600T386	60	80	380	0,85	149			-	-	-	90	133	189	243	301	398
L8W600T405			460	0,85	123			-	-	95	140	202	284	362	446	
L8W670T386	67	90	380	0,86	168			-	-	-	-	113	163	212	263	352
L8W670T405			460	0,86	139			-	-	-	118	173	247	316	391	516
L8W750T386	75	100	380	0,85	187			-	-	-	-	99	145	189	235	318
L8W750T405			460	0,85	154			-	-	-	104	154	220	284	351	465
L8W830T386	83	110	380	0,85	206			-	-	-	-	-	128	168	211	288
L8W830T405			460	0,85	170			-	-	-	-	135	196	254	315	421
L8W930T386	93	125	380	0,87	231			-	-	-	-	-	109	146	184	257
L8W930T405			460	0,87	191			-	-	-	-	114	169	221	277	377

Exposed cable laid at a temperature of 30°C, maximum conductor temperature of 90°C

l8w_cavi-60_b_te

L8W, 60 Hz: SIZING OF ETHYLENE-PROPILENE (EPR) CABLES Y/Δ (STAR / DELTA) STARTING

MOTOR TYPE THREE-PHASE	RATED POWER Kw	RATED POWER HP	RATED VOLTAGE V	Cos φ AT S.F.	CURRENT AT S.F. A	VOLTAGE DROP %	Cable cross section: 4G x …mm2 + 3 x …mm2									
							mm2	4	6	10	16	25	35	50	70	95
							A max*	73	94	130	173	220	274	333	426	516
							Maximum lenght in metres									
L8W300T386	30	40	380	0,83	78,0	4		-	57	105	169	260	361	500		
L8W300T405			460	0,83	64,4			55	88	158	251	385				
L8W370T386	37	50	380	0,83	96,1			-	-	81	134	208	290	403		
L8W370T405			460	0,83	79,4			-	67	124	201	309	429			
L8W450T386	45	60	380	0,85	114			-	-	64	107	169	237	332	456	
L8W450T405			460	0,85	94,3			-	52	99	162	252	352	491		
L8W520T386	52	70	380	0,83	134			-	-	-	90	143	203	285	391	
L8W520T405			460	0,83	110			-	-	83	138	216	303	422		
L8W550T386	55	75	380	0,85	139			-	-	-	84	134	191	269	371	
L8W550T405			460	0,85	115			-	-	77	128	203	285	399		
L8W600T386	60	80	380	0,85	149			-	-	-	77	124	177	250	345	487
L8W600T405			460	0,85	123			-	-	70	118	188	265	372		
L8W670T386	67	90	380	0,86	168			-	-	-	64	106	152	217	302	430
L8W670T405			460	0,86	139			-	-	-	100	161	229	324	447	
L8W750T386	75	100	380	0,85	187			-	-	-	-	94	136	195	272	389
L8W750T405			460	0,85	154			-	-	-	89	144	206	292	403	
L8W830T386	83	110	380	0,85	206			-	-	-	-	82	121	174	244	352
L8W830T405			460	0,85	170			-	-	-	77,6	127	184	261	363	
L8W930T386	93	125	380	0,87	231			-	-	-	-	69	103	150	213	313
L8W930T405			460	0,87	191			-	-	-	-	108	158	227	318	458

Exposed cable laid at a temperature of 30°C, maximum conductor temperature of 90°C

l8w_cavi-SD-60_a_te

*A max is the maximum rated current of the motor

L10W, 60 Hz: SIZING OF ETHYLENE-PROPILENE (EPR) CABLES DOL (DIRECT ON LINE) STARTING

MOTOR TYPE THREE-PHASE	RATED POWER Kw	RATED POWER HP	RATED VOLTAGE V	Cos φ AT S.F.	CURRENT AT S.F. A	VOLTAGE DROP %	Cable cross section: 4G x …mm²								
							mm2	50	70	95	120	150	185	240	300
							A max	192	246	298	346	399	456	538	621
							Maximum lenght in metres								
L10W930T386	93	125	380	0,86	228	4		-	112	148	187	225	262	318	365
L10W930T405			460	0,86	189			117	172	225	281	336	390	470	538
L10W1100T386	110	150	380	0,83	316			-	-	-	127	155	182	221	254
L10W1100T405			460	0,83	261			-	-	154	194	234	273	329	377
L10W1300T386	130	175	380	0,82	329			-	-	-	121	148	174	211	242
L10W1300T405			460	0,82	271			-	-	147	186	224	261	314	359
L10W1500T386	150	200	380	0,83	379			-	-	-	-	124	147	180	209
L10W1500T405			460	0,83	313			-	-	-	156	190	223	270	311

Exposed cable laid at a temperature of 30°C, maximum conductor temperature of 90°C

l10w_cavi-60_b_te

L10W, 60 Hz: SIZING OF ETHYLENE-PROPILENE (EPR) CABLES Y/Δ (STAR / DELTA) STARTING

MOTOR TYPE THREE-PHASE	RATED POWER Kw	RATED POWER HP	RATED VOLTAGE V	Cos φ AT S.F.	CURRENT AT S.F. A	VOLTAGE DROP %	Cable cross section: 4G x …mm2 + 3 x …mm2								
							mm2	25	35	50	70	95	120	150	185
							A max*	220	274	333	426	516	599	691	790
							Maximum lenght in metres								
L10W930T386	93	125	380	0,86	228	4		-	105	153	216	277	342	405	468
L10W930T405			460	0,86	189			111	161	231	323	411	506		
L10W1100T386	110	150	380	0,83	316			-	-	104	151	195	242	288	332
L10W1100T405			460	0,83	261			-	109	161	229	293	361	426	490
L10W1300T386	130	175	380	0,82	329			-	-	99	145	188	233	276	318
L10W1300T405			460	0,82	271			-	105	154	220	282	347	409	470
L10W1500T386	150	200	380	0,83	379			-	-	-	120	158	198	236	274
L10W1500T405			460	0,83	313			-	-	127	185	239	296	352	406

Exposed cable laid at a temperature of 30°C, maximum conductor temperature of 90°C

l10w_cavi-SD-60_a_te

*A max is the maximum rated current of the motor

SPLICE BETWEEN DROP CABLE AND MOTOR CABLE

MOTOR TYPE	POWER kW	TYPE OF SPLICE	FOUR-CORE DROP CABLE - SECTION (mm^2)															
			1,5	2,5	4	6	10	16	25	35	50	70	95	120	150	185	240	300
4OS L4C	0,37 - 7,5	Resin-filled method	GR1	GR1	GR1	GR2	GR2	GR6	GR6	GR6	GR4	GR5	GR5	-	-	-	-	-
		Heat-shrink method	GT1	GT1	GT2	GT2	GT3	GT4	GT5	GT6	-	-	-	-	-	-	-	-
		Tape method	Self-vulcanizing tape + self-vulcanizing sealing putty and PVC tape (1)															
L6C L6W	4 - 37	Resin-filled method	-	-	GR1	GR2	GR2	GR6	GR6	GR6	GR4	GR5	GR5	-	-	-	-	-
		Heat-shrink method	-	-	GT2	GT2	GT3	GT4	GT5	GT6	-	-	-	-	-	-	-	-
		Tape method	Self-vulcanizing tape + self-vulcanizing sealing putty and PVC tape (1)															

MOTOR TYPE	POWER kW	TYPE OF SPLICE	THREE-CORE DROP CABLE - SECTION (mm^2)															
			1,5	2,5	4	6	10	16	25	35	50	70	95	120	150	185	240	300
L6C L6W	4 - 37	Resin-filled method	-	-	GR1	GR1	GR2	GR2	GR6	GR6	GR6	GR4	GR5	-	-	-	-	-
		Heat-shrink method	-	-	GT2	GT2	GT3	GT4	GT5	GT6	-	-	-	-	-	-	-	-
		Tape method	Self-vulcanizing tape + PVC tape															

MOTOR TYPE	POWER kW	TYPE OF SPLICE	SINGLE-CORE DROP CABLE - SECTION (mm^2)															
			1,5	2,5	4	6	10	16	25	35	50	70	95	120	150	185	240	300
L8W L10W L12W	30 - 300	Resin-filled method	-	-	-	GR1	GR1	GR1	GR1	GR1	GR1	GR2	GR2	GR2	GR6	GR6	GR6	GR4
		Heat-shrink method	-	-	-	-	-	-	-	-	-	-	-	-	-	-	-	-
		Tape method	Self-vulcanizing tape + PVC tape															

(1) Use self-vulcanizing sealing putty to fill in the gaps between the three-conductor cable and the ground cable in the area covered by the final layer of tape, to restore continuity to the protective sheath.

RESIN-FILLED SPLICES				HEAT-SHRINK SPLICES			
TYPE	L [mm]	TYPE	L [mm]	TYPE	L [mm]	TYPE	L [mm]
GR1	148 x 32	GR5	369 x 76	GT1	450	GT4	450
GR2	178 x 36	GR6	270 x 55	GT2	450	GT5	500
GR4	319 x 63			GT3	450	GT6	500

L-giunzioni-en_d_te

CALCULATING THE SPEED OF THE FLUID THAT FLOWS AROUND A SUBMERGED MOTOR AND SIZING OF THE COOLING SLEEVE

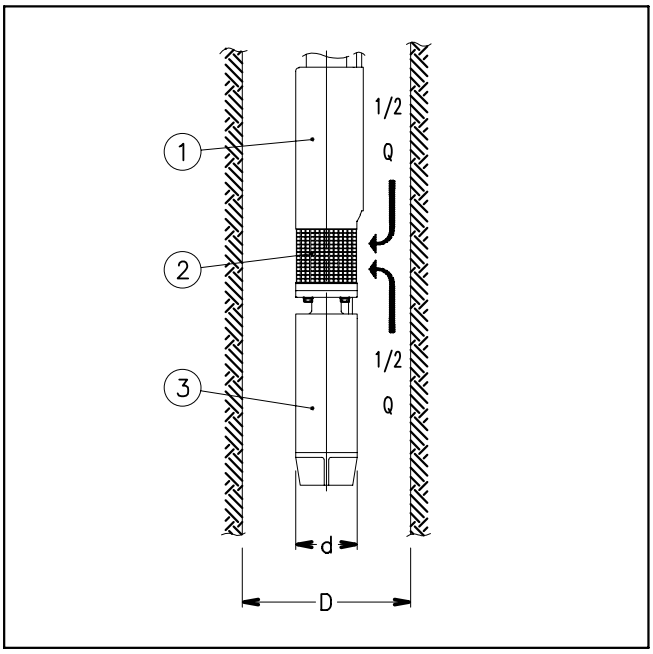

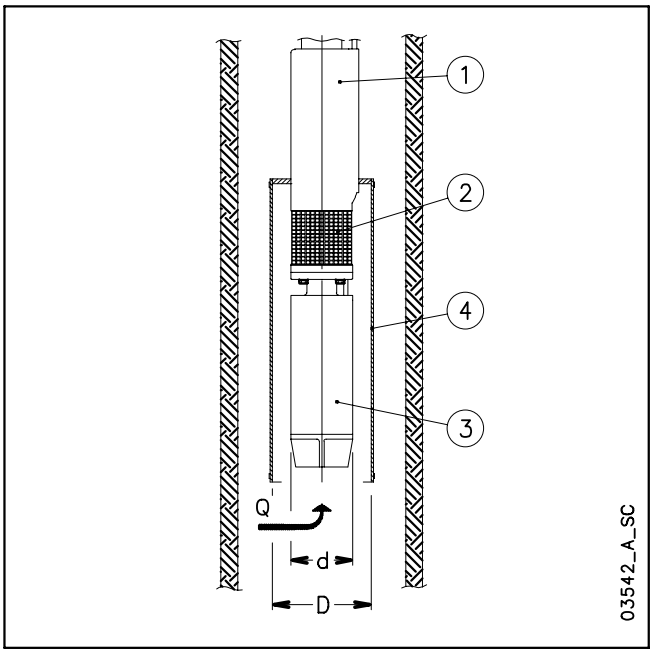

The following formula is used to verify whether the speed of the fluid that flows around the motor of a submersible pump is high enough to guarantee the proper cooling of the motor:

$$v = \frac{\frac{Q}{2}}{\pi \cdot (\frac{D^2}{4} - \frac{d^2}{4})}$$

Where: Q in [m³/s] is the operating flow rate of the electric pump; only half of this flow is taken into account, because the fluid which is sucked into the area of the filter (2), comes from the motor side (3) as well as from the pump side (1);
D in [m] corresponds to the diameter of the well;
d in [m] corresponds to the diameter of the motor (3);
v in [m/s] is the calculated speed of the fluid that flows around the motor.

Now, compare the speed thus calculated (v) with the minimum speed required for correct cooling of the motor (v_m): if $v \geq v_m$ it means that the motor is properly cooled, if $v < v_m$ will be necessary to mount a cooling sleeve (4).

Example:

An electric pump OZ630/12 (motor diameter d = 0.144 m) operates in an 8" well (well diameter D = 0.203 m) with flow rate Q = 20 m³/h = 0.0055 m³/s.

Speed of fluid $v = (0.0055/2) / \{\pi \cdot [(0.203)^2/4 - (0.144)^2/4]\} = 0.17$ m/s.

The minimum speed required for proper motor cooling is $v_m = 0.20$ m/s.

Because $v < v_m$, it will be necessary to mount a cooling sleeve.

The following formula is used to determine the maximum diameter of a cooling sleeve to be mounted on a submersible motor:

$$D = \sqrt{4 \cdot \left(\frac{Q}{v \cdot \pi} + \frac{d^2}{4} \right)}$$

Where: Q in [m³/s] is the operating flow rate of the electric pump; the entire flow is taken into account because the fluid comes from the motor side (3) only;
D in [m] corresponds to the diameter of the cooling sleeve (4);
d in [m] corresponds to the diameter of the motors(3);
v_m in [m/s] is the minimum speed of the fluid that flows around the motor.

If the electric pump operates at different flow rate, the minimum flow rate must be taken into account for calculating the diameter of the cooling sleeve.

Example:

A motor coupled to the electric pump OZ615/24 (motor diameter d = 0.144 m), which operates with flow rate Q = 15 m³/h = 0.0042 m³/s, requires a minimum speed of the fluid of $v_m = 0.20$ m/s.

Cooling sleeve diameter $D = \{4 \cdot [(0.0042/(0.2 \cdot \pi) + (0.144)^2/4]\}^{0.5} = 0.217$ m.

ASYNCHRONOUS MOTOR STARTING SYSTEMS

Direct

Suitable for low-power motors.
The starting current (Is) is much higher than the rated current (In).
Starting current Is = In x 4 ÷ 8
Starting torque Ts = Tn x 2 ÷ 3

Indirect

• Star/Delta

The starting current (Is) is three times less than the direct starting current.
Starting current Is = In x 1.3 ÷ 2.7
Starting torque Ts = Tn x 0.7 ÷ 1
In the star to delta changeover phase (approx. 70 ms) the motor is not supplied and tends to reduce its rotation speed.
In the case of submersible electric pumps with power above 10 HP, the modest mass of the rotor causes a slowdown at changeover, so that the initial Star supply phase is rendered partially useless.
In such cases we recommend using impedance panels or an autotransformer.

• Impedances

The motor is started with a voltage which is lower than the rated one, and which is obtained by means of impedances.

The Lowara panels use impedances which cut down to 70% the starting voltage.

The switch to the rated voltage takes place without any interruptions of the power supply.

Rated voltage Un = 400 V
Starting voltage Us = Un x 0,7 = 280 V

Starting current

$$Is = In \times 4 \div 8 \times \left(\frac{Us}{Un}\right) = In \times 3 \div 6$$

Starting torque

$$Ts = Tn \times 2 \div 3 \times \left(\frac{Us}{Un}\right)^2 = Tn \times 1 \div 1{,}5$$

Autotransformer

The pump is started with a voltage which is lower than the rated one.
The Lowara panels use an autotransformer with a voltage that is 70% the value of the line voltage.
The switch to the rated voltage occurs without any interruptions of the power supply.
Rated voltage Un = 400 V

Starting current

$$Is = In \times 4 \div 8 \times \left(\frac{Us}{Un}\right) = In \times 3 \div 6$$

Starting torque

$$Ts = Tn \times 2 \div 3 \times \left(\frac{Us}{Un}\right)^2 = Tn \times 1 \div 1{,}5$$

DIAGRAM OF STARTING INPUTS

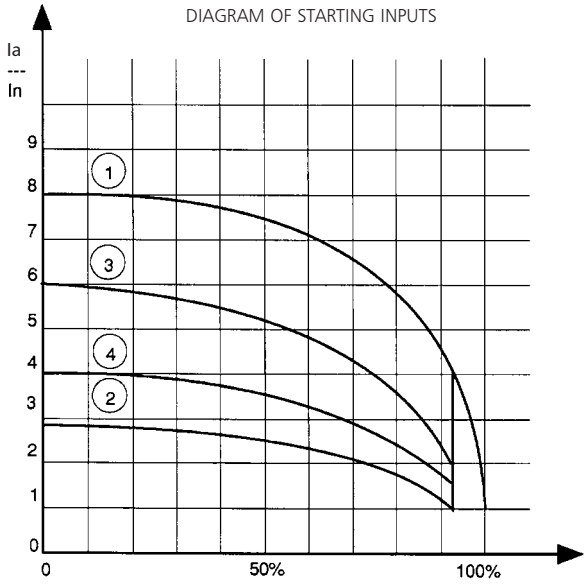

1 = Direct
2 = Star-Delta
3 = Impedances
4 = Autotransformer

WATER REQUIREMENTS IN CIVIL USERS

Determination of the water requirement depends on the type of users and contemporaneity factor. The calculation may be subject to regulations, standards or customs that may vary from country to country. The calculation method shown below is an example based on practical experience, designed to provide a reference value and not a substitute for detailed analytical calculation.

Water requirements in condominiums

The **consumption table** shows the maximum values for each delivery point, depending on the plumbing amenities.

MAXIMUM CONSUMPTION FOR EACH DELIVERY POINT

TYPE	CONSUMPTION (l/min)
Sink	9
Dishwasher	10
Washing machine	12
Shower	12
Bathtub	15
Washbasin	6
Bidet	6
Flush tank WC	6
Controlled flushing system WC	90

G-at-cm_a_th

The **sum of the water consumption values** of each delivery point determines the maximum theoretical requirement, which must be reduced according to the **contemporaneity coefficient**, because in actual fact the delivery points are never used all together.

$$f = \frac{1}{\sqrt{(0{,}857 \times Nr \times Na)}}$$ Coefficient for apartments with one bathroom and flush tank WC

$$f = \frac{1}{\sqrt{(0{,}857 \times Nr \times Na)}}$$ Coefficient for apartments with one bathroom and controlled flushing system WC

$$f = \frac{1{,}03}{\sqrt{(0{,}545 \times Nr \times Na)}}$$ Coefficient for apartments with two bathrooms and flush tank WC

$$f = \frac{0{,}8}{\sqrt{(0{,}727 \times Nr \times Na)}}$$ Coefficient for apartments with two bathrooms and controlled flushing system WC

f= coefficient; Nr= number of delivery points; Na= number of apartments

The **table of water requirements in civil users** shows the maximum contemporaneity flow-rate values based on the **number of apartments** and the type of WC for apartments with one bathroom and two bathrooms. As regards apartments with one bathroom, 7 drawing points have been taken into consideration, while 11 points have been considered for apartments with two bathrooms. If the number of drawing points or apartments is different, use the formulas to **calculate** the requirement.

TABLE OF WATER REQUIREMENTS IN CIVIL USERS

NUMBER OF APARTMENTS	WITH FLUSH TANK WC		WITH CONTROLLED FLUSHING SYSTEM WC	
	1	2	1	2
	FLOW RATE (l/min)			
1	32	40	60	79
2	45	56	85	111
3	55	68	105	136
4	63	79	121	157
5	71	88	135	176
6	78	97	148	193
7	84	105	160	208
8	90	112	171	223
9	95	119	181	236
10	100	125	191	249
11	105	131	200	261
12	110	137	209	273
13	114	143	218	284
14	119	148	226	295
15	123	153	234	305
16	127	158	242	315
17	131	163	249	325
18	134	168	256	334
19	138	172	263	343
20	142	177	270	352
21	145	181	277	361
22	149	185	283	369
23	152	190	290	378
24	155	194	296	386
25	158	198	302	394
26	162	202	308	401
27	165	205	314	409
28	168	209	320	417
29	171	213	325	424
30	174	217	331	431
35	187	234	357	466
40	200	250	382	498
45	213	265	405	528
50	224	280	427	557
55	235	293	448	584
60	245	306	468	610
65	255	319	487	635
70	265	331	506	659
75	274	342	523	682
80	283	354	540	704
85	292	364	557	726
90	301	375	573	747
95	309	385	589	767
100	317	395	604	787
120	347	433	662	863
140	375	468	715	932
160	401	500	764	996
180	425	530	811	1056
200	448	559	854	1114

For seaside resorts, a flow rate increased by at least 20% must be considered.

G-at-fi_a_th

WATER REQUIREMENTS FOR COMMUNITY BUILDINGS

The requirements of buildings intended for specific uses, such as **offices, residential units, hotels, department stores, nursing homes** and so on, are different from those of condominiums, and both their global daily water consumption and the maximum contemporaneity flow rate are usually greater. The **diagram of water requirements for community buildings** shows the maximum contemporaneity flow rate of some types of communities, for guidance.
These requirements must be determined case by case with the utmost accuracy, using analytical calculation methods, according to particular needs and local provisions.

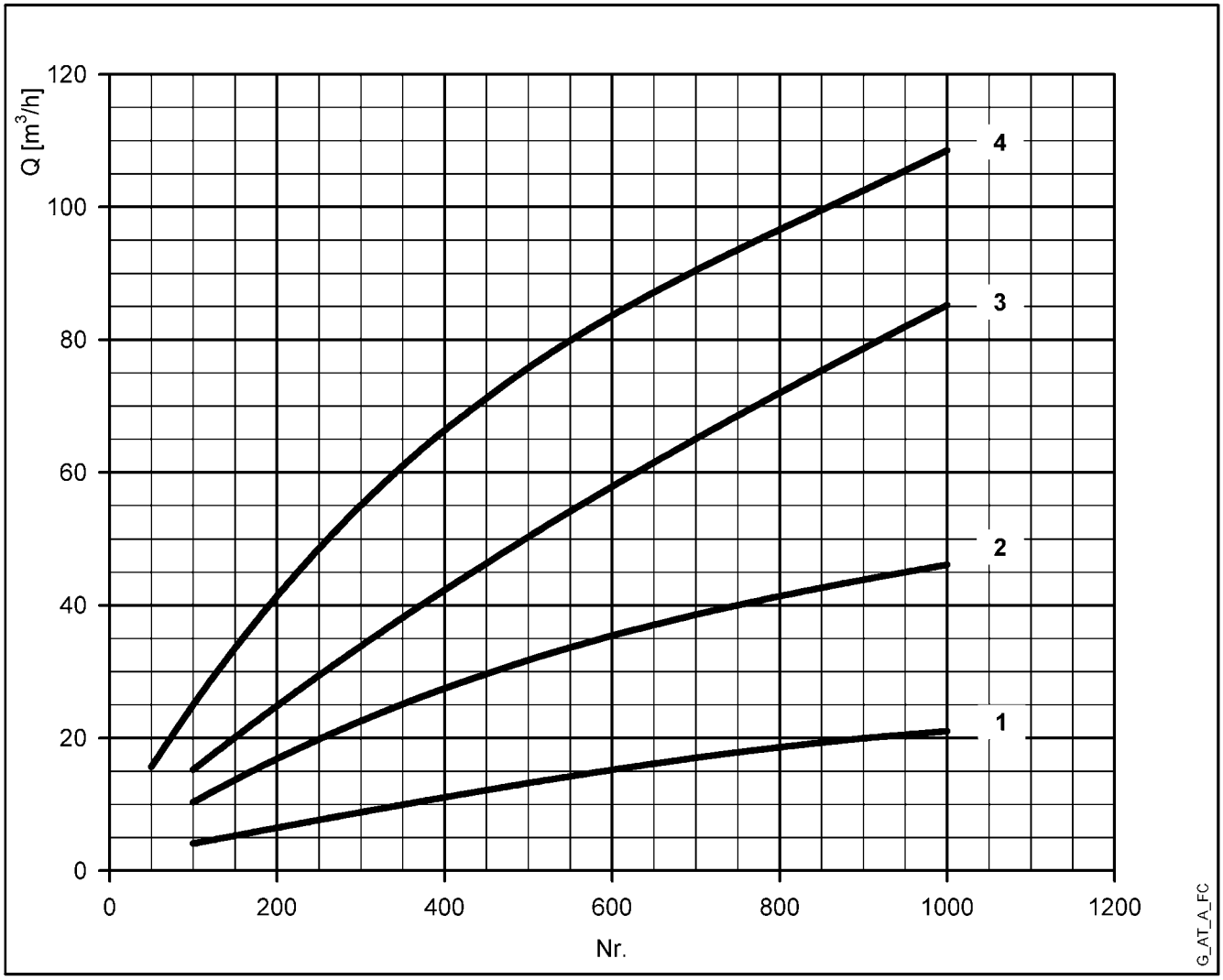

For seaside resorts, the flow rate must be increased by at least 20%.

1= Offices (N. of people)
2= Department stores (N. of people)
3= Nursing homes (N. of beds)
4= Hotels, residences (N. of beds)

NPSH

The minimum operating values that can be reached at the pump suction end are limited by the onset of cavitation.

Cavitation is the formation of vapour-filled cavities within liquids where the pressure is locally reduced to a critical value, or where the local pressure is equal to, or just below the vapour pressure of the liquid.

The vapour-filled cavities flow with the current and when they reach a higher pressure area the vapour contained in the cavities condenses. The cavities collide, generating pressure waves that are transmitted to the walls. These, being subjected to stress cycles, gradually become deformed and yield due to fatigue. This phenomenon, characterized by a metallic noise produced by the hammering on the pipe walls, is called incipient cavitation.

The damage caused by cavitation may be magnified by electrochemical corrosion and a local rise in temperature due to the plastic deformation of the walls. The materials that offer the highest resistance to heat and corrosion are alloy steels, especially austenitic steel. The conditions that trigger cavitation may be assessed by calculating the total net suction head, referred to in technical literature with the acronym NPSH (Net Positive Suction Head).

The NPSH represents the total energy (expressed in m.) of the liquid measured at suction under conditions of incipient cavitation, excluding the vapour pressure (expressed in m.) that the liquid has at the pump inlet.

To find the static height hz at which to install the machine under safe conditions, the following formula must be verified:

$$\mathbf{hp + hz \geq (NPSHr + 0.5) + hf + hpv} \quad ①$$

where:

hp is the absolute pressure applied to the free liquid surface in the suction tank, expressed in m. of liquid; hp is the quotient between the barometric pressure and the specific weight of the liquid.

hz is the suction lift between the pump axis and the free liquid surface in the suction tank, expressed in m.; hz is negative when the liquid level is lower than the pump axis.

hf is the flow resistance in the suction line and its accessories, such as: fittings, foot valve, gate valve, elbows, etc.

hpv is the vapour pressure of the liquid at the operating temperature, expressed in m. of liquid. hpv is the quotient between the Pv vapour pressure and the liquid's specific weight.

0,5 is the safety factor.

The maximum possible suction head for installation depends on the value of the atmospheric pressure (i.e. the elevation above sea level at which the pump is installed) and the temperature of the liquid.

To help the user, with reference to water temperature (4° C) and to the elevation above sea level, the following tables show the drop in hydraulic pressure head in relation to the elevation above sea level, and the suction loss in relation to temperature.

Water temperature (°C)	20	40	60	80	90	110	120
Suction loss (m)	0,2	0,7	2,0	5,0	7,4	15,4	21,5

Elevation above sea level (m)	500	1000	1500	2000	2500	3000
Suction loss (m)	0,55	1,1	1,65	2,2	2,75	3,3

Friction loss is shown in the tables at pages 92-93 of this catalogue. To reduce it to a minimum, especially in cases of high suction head (over 4-5 m.) or within the operating limits with high flow rates, we recommend using a suction line having a larger diameter than that of the pump's suction port.
It is always a good idea to position the pump as close as possible to the liquid to be pumped.

Make the following calculation:

Liquid: water at ~15°C $\gamma = 1$ kg/dm^3
Flow rate required: 30 m^3/h
Head for required delivery: 43 m.
Suction lift: 3,5 m.
The selection is an FHE 40-200/75 pump whose NPSH required value is, at 30 m^3/h, di 2,5 m.

For water at 15 °C

hp = Pa / γ = 10,33m, hpv = Pv / γ = 0,174m (0,01701 bar)

The Hf flow resistance in the suction line with foot valves is ~ 1,2 m.
By substituting the parameters in formula ① with the numeric values above, we have:

$$10,33 + (-3,5) \geq (2,5 + 0,5) + 1,2 + 0,17$$

from which we have: 6,8 > 4,4

The relation is therefore verified.

TECHNICAL APPENDIX VAPOUR PRESSURE PS VAPOUR PRESSURE AND ρ DENSITY OF WATER TABLE

t	T	ps	ρ
°C	K	bar	kg/dm^3
0	273,15	0,00611	0,9998
1	274,15	0,00657	0,9999
2	275,15	0,00706	0,9999
3	276,15	0,00758	0,9999
4	277,15	0,00813	1,0000
5	278,15	0,00872	1,0000
6	279,15	0,00935	1,0000
7	280,15	0,01001	0,9999
8	281,15	0,01072	0,9999
9	282,15	0,01147	0,9998
10	283,15	0,01227	0,9997
11	284,15	0,01312	0,9997
12	285,15	0,01401	0,9996
13	286,15	0,01497	0,9994
14	287,15	0,01597	0,9993
15	288,15	0,01704	0,9992
16	289,15	0,01817	0,9990
17	290,15	0,01936	0,9988
18	291,15	0,02062	0,9987
19	292,15	0,02196	0,9985
20	293,15	0,02337	0,9983
21	294,15	0,24850	0,9981
22	295,15	0,02642	0,9978
23	296,15	0,02808	0,9976
24	297,15	0,02982	0,9974
25	298,15	0,03166	0,9971
26	299,15	0,03360	0,9968
27	300,15	0,03564	0,9966
28	301,15	0,03778	0,9963
29	302,15	0,04004	0,9960
30	303,15	0,04241	0,9957
31	304,15	0,04491	0,9954
32	305,15	0,04753	0,9951
33	306,15	0,05029	0,9947
34	307,15	0,05318	0,9944
35	308,15	0,05622	0,9940
36	309,15	0,05940	0,9937
37	310,15	0,06274	0,9933
38	311,15	0,06624	0,9930
39	312,15	0,06991	0,9927
40	313,15	0,07375	0,9923
41	314,15	0,07777	0,9919
42	315,15	0,08198	0,9915
43	316,15	0,09639	0,9911
44	317,15	0,09100	0,9907
45	318,15	0,09582	0,9902
46	319,15	0,10086	0,9898
47	320,15	0,10612	0,9894
48	321,15	0,11162	0,9889
49	322,15	0,11736	0,9884
50	323,15	0,12335	0,9880
51	324,15	0,12961	0,9876
52	325,15	0,13613	0,9871
53	326,15	0,14293	0,9862
54	327,15	0,15002	0,9862

t	T	ps	ρ
°C	K	bar	kg/dm^3
55	328,15	0,15741	0,9857
56	329,15	0,16511	0,9852
57	330,15	0,17313	0,9846
58	331,15	0,18147	0,9842
59	332,15	0,19016	0,9837
60	333,15	0,1992	0,9832
61	334,15	0,2086	0,9826
62	335,15	0,2184	0,9821
63	336,15	0,2286	0,9816
64	337,15	0,2391	0,9811
65	338,15	0,2501	0,9805
66	339,15	0,2615	0,9799
67	340,15	0,2733	0,9793
68	341,15	0,2856	0,9788
69	342,15	0,2984	0,9782
70	343,15	0,3116	0,9777
71	344,15	0,3253	0,9770
72	345,15	0,3396	0,9765
73	346,15	0,3543	0,9760
74	347,15	0,3696	0,9753
75	348,15	0,3855	0,9748
76	349,15	0,4019	0,9741
77	350,15	0,4189	0,9735
78	351,15	0,4365	0,9729
79	352,15	0,4547	0,9723
80	353,15	0,4736	0,9716
81	354,15	0,4931	0,9710
82	355,15	0,5133	0,9704
83	356,15	0,5342	0,9697
84	357,15	0,5557	0,9691
85	358,15	0,5780	0,9684
86	359,15	0,6011	0,9678
87	360,15	0,6249	0,9671
88	361,15	0,6495	0,9665
89	362,15	0,6749	0,9658
90	363,15	0,7011	0,9652
91	364,15	0,7281	0,9644
92	365,15	0,7561	0,9638
93	366,15	0,7849	0,9630
94	367,15	0,8146	0,9624
95	368,15	0,8453	0,9616
96	369,15	0,8769	0,9610
97	370,15	0,9094	0,9602
98	371,15	0,9430	0,9596
99	372,15	0,9776	0,9586
100	373,15	1,0133	0,9581
102	375,15	1,0878	0,9567
104	377,15	1,1668	0,9552
106	379,15	1,2504	0,9537
108	381,15	1,3390	0,9522
110	383,15	1,4327	0,9507
112	385,15	1,5316	0,9491
114	387,15	1,6362	0,9476
116	389,15	1,7465	0,9460
118	391,15	1,8628	0,9445

t	T	ps	ρ
°C	K	bar	kg/dm^3
120	393,15	1,9854	0,9429
122	395,15	2,1145	0,9412
124	397,15	2,2504	0,9396
126	399,15	2,3933	0,9379
128	401,15	2,5435	0,9362
130	403,15	2,7013	0,9346
132	405,15	2,867	0,9328
134	407,15	3,041	0,9311
136	409,15	3,223	0,9294
138	411,15	3,414	0,9276
140	413,15	3,614	0,9258
145	418,15	4,155	0,9214
155	428,15	5,433	0,9121
160	433,15	6,181	0,9073
165	438,15	7,008	0,9024
170	433,15	7,920	0,8973
175	448,15	8,924	0,8921
180	453,15	10,027	0,8869
185	458,15	11,233	0,8815
190	463,15	12,551	0,8760
195	468,15	13,987	0,8704
200	473,15	15,550	0,8647
205	478,15	17,243	0,8588
210	483,15	19,077	0,8528
215	488,15	21,060	0,8467
220	493,15	23,198	0,8403
225	498,15	25,501	0,8339
230	503,15	27,976	0,8273
235	508,15	30,632	0,8205
240	513,15	33,478	0,8136
245	518,15	36,523	0,8065
250	523,15	39,776	0,7992
255	528,15	43,246	0,7916
260	533,15	46,943	0,7839
265	538,15	50,877	0,7759
270	543,15	55,058	0,7678
275	548,15	59,496	0,7593
280	553,15	64,202	0,7505
285	558,15	69,186	0,7415
290	563,15	74,461	0,7321
295	568,15	80,037	0,7223
300	573,15	85,927	0,7122
305	578,15	92,144	0,7017
310	583,15	98,70	0,6906
315	588,15	105,61	0,6791
320	593,15	112,89	0,6669
325	598,15	120,56	0,6541
330	603,15	128,63	0,6404
340	613,15	146,05	0,6102
350	623,15	165,35	0,5743
360	633,15	186,75	0,5275
370	643,15	210,54	0,4518
374,15	647,30	221,20	0,3154

G-at_npsh_a_sc

TABLE OF FLOW RESISTANCE IN 100 m OF STRAIGHT CAST IRON PIPELINE (HAZEN-WILLIAMS FORMULA C=100)

FLOW RATE			NOMINAL DIAMETER in mm and INCHES																
m^3/h	l/min		15 1/2"	20 3/4"	25 1"	32 1 1/4"	40 1 1/2"	50 2	65 2 1/2"	80 3"	100 4"	125 5"	150 6"	175 7"	200 8"	250 10"	300 12"	350 14"	400 16"
0,6	10	v	0,94	0,53	0,34	0,21	0,13												
		hr	16	3,94	1,33	0,40	0,13												
0,9	15	v	1,42	0,80	0,51	0,31	0,20												
		hr	33,9	8,35	2,82	0,85	0,29												
1,2	20	v	1,89	1,06	0,68	0,41	0,27	0,17											
		hr	57,7	14,21	4,79	1,44	0,49	0,16											
1,5	25	v	2,36	1,33	0,85	0,52	0,33	0,21											
		hr	87,2	21,5	7,24	2,18	0,73	0,25											
1,8	30	v	2,83	1,59	1,02	0,62	0,40	0,25											
		hr	122	30,1	10,1	3,05	1,03	0,35											
2,1	35	v	3,30	1,86	1,19	0,73	0,46	0,30											
		hr	162	40,0	13,5	4,06	1,37	0,46											
2,4	40	v		2,12	1,36	0,83	0,53	0,34	0,20										
		hr		51,2	17,3	5,19	1,75	0,59	0,16										
3	50	v		2,65	1,70	1,04	0,66	0,42	0,25										
		hr		77,4	26,1	7,85	2,65	0,89	0,25										
3,6	60	v		3,18	2,04	1,24	0,80	0,51	0,30										
		hr		108	36,6	11,0	3,71	1,25	0,35										
4,2	70	v		3,72	2,38	1,45	0,93	0,59	0,35										
		hr		144	48,7	14,6	4,93	1,66	0,46										
4,8	80	v		4,25	2,72	1,66	1,06	0,68	0,40										
		hr		185	62,3	18,7	6,32	2,13	0,59										
5,4	90	v			3,06	1,87	1,19	0,76	0,45	0,30									
		hr			77,5	23,3	7,85	2,65	0,74	0,27									
6	100	v			3,40	2,07	1,33	0,85	0,50	0,33									
		hr			94,1	28,3	9,54	3,22	0,90	0,33									
7,5	125	v			4,25	2,59	1,66	1,06	0,63	0,41									
		hr			142	42,8	14,4	4,86	1,36	0,49									
9	150	v				3,11	1,99	1,27	0,75	0,50	0,32								
		hr				59,9	20,2	6,82	1,90	0,69	0,23								
10,5	175	v				3,63	2,32	1,49	0,88	0,58	0,37								
		hr				79,7	26,9	9,07	2,53	0,92	0,31								
12	200	v				4,15	2,65	1,70	1,01	0,66	0,42								
		hr				102	34,4	11,6	3,23	1,18	0,40								
15	250	v				5,18	3,32	2,12	1,26	0,83	0,53	0,34							
		hr				154	52,0	17,5	4,89	1,78	0,60	0,20							
18	300	v					3,98	2,55	1,51	1,00	0,64	0,41							
		hr					72,8	24,6	6,85	2,49	0,84	0,28							
24	400	v					5,31	3,40	2,01	1,33	0,85	0,54	0,38						
		hr					124	41,8	11,66	4,24	1,43	0,48	0,20						
30	500	v					6,63	4,25	2,51	1,66	1,06	0,68	0,47						
		hr					187	63,2	17,6	6,41	2,16	0,73	0,30						
36	600	v						5,10	3,02	1,99	1,27	0,82	0,57	0,42					
		hr						88,6	24,7	8,98	3,03	1,02	0,42	0,20					
42	700	v						5,94	3,52	2,32	1,49	0,95	0,66	0,49					
		hr						118	32,8	11,9	4,03	1,36	0,56	0,26					
48	800	v						6,79	4,02	2,65	1,70	1,09	0,75	0,55					
		hr						151	42,0	15,3	5,16	1,74	0,72	0,34					
54	900	v						7,64	4,52	2,99	1,91	1,22	0,85	0,62					
		hr						188	52,3	19,0	6,41	2,16	0,89	0,42					
60	1000	v							5,03	3,32	2,12	1,36	0,94	0,69	0,53				
		hr							63,5	23,1	7,79	2,63	1,08	0,51	0,27				
75	1250	v							6,28	4,15	2,65	1,70	1,18	0,87	0,66				
		hr							96,0	34,9	11,8	3,97	1,63	0,77	0,40				
90	1500	v							7,54	4,98	3,18	2,04	1,42	1,04	0,80				
		hr							134	48,9	16,5	5,57	2,29	1,08	0,56				
105	1750	v							8,79	5,81	3,72	2,38	1,65	1,21	0,93				
		hr							179	65,1	21,9	7,40	3,05	1,44	0,75				
120	2000	v								6,63	4,25	2,72	1,89	1,39	1,06	0,68			
		hr								83,3	28,1	9,48	3,90	1,84	0,96	0,32			
150	2500	v								8,29	5,31	3,40	2,36	1,73	1,33	0,85			
		hr								126	42,5	14,3	5,89	2,78	1,45	0,49			
180	3000	v									6,37	4,08	2,83	2,08	1,59	1,02	0,71		
		hr									59,5	20,1	8,26	3,90	2,03	0,69	0,28		
210	3500	v									7,43	4,76	3,30	2,43	1,86	1,19	0,83		
		hr									79,1	26,7	11,0	5,18	2,71	0,91	0,38		
240	4000	v									8,49	5,44	3,77	2,77	2,12	1,36	0,94		
		hr									101	34,2	14,1	6,64	3,46	1,17	0,48		
300	5000	v										6,79	4,72	3,47	2,65	1,70	1,18		
		hr										51,6	21,2	10,0	5,23	1,77	0,73		
360	6000	v										8,15	5,66	4,16	3,18	2,04	1,42		
		hr										72,3	29,8	14,1	7,33	2,47	1,02		
420	7000	v											6,61	4,85	3,72	2,38	1,65	1,21	
		hr											39,6	18,7	9,75	3,29	1,35	0,64	
480	8000	v											7,55	5,55	4,25	2,72	1,89	1,39	
		hr											50,7	23,9	12,49	4,21	1,73	0,82	
540	9000	v											8,49	6,24	4,78	3,06	2,12	1,56	1,19
		hr											63,0	29,8	15,5	5,24	2,16	1,02	0,53
600	10000	v												6,93	5,31	3,40	2,36	1,73	1,33
		hr												36,2	18,9	6,36	2,62	1,24	0,65

The hr values must be multiplied by:
0.71 for galvanized or painted steel pipes
0.54 for stainless steel or copper pipes
0.47 for PVC or PE pipes

G-at-pct_a_th

hr = flow resistance for 100m of straight pipeline (m)
V = water speed (m/s)

FLOW RESISTANCE

TABLE OF FLOW RESISTANCE IN BENDS, VALVES AND GATES

The flow resistance is calculated using the equivalent pipeline length method according to the table below:

ACCESSORY TYPE	DN											
	25	32	40	50	65	80	100	125	150	200	250	300
	Equivalent pipeline length (m)											
45° bend	0,2	0,2	0,4	0,4	0,6	0,6	0,9	1,1	1,5	1,9	2,4	2,8
90° bend	0,4	0,6	0,9	1,1	1,3	1,5	2,1	2,6	3,0	3,9	4,7	5,8
90° smooth bend	0,4	0,4	0,4	0,6	0,9	1,1	1,3	1,7	1,9	2,8	3,4	3,9
Union tee or cross	1,1	1,3	1,7	2,1	2,6	3,2	4,3	5,3	6,4	7,5	10,7	12,8
Gate	-	-	-	0,2	0,2	0,2	0,4	0,4	0,6	0,9	1,1	1,3
Non return valve	1,1	1,5	1,9	2,4	3,0	3,4	4,7	5,9	7,4	9,6	11,8	13,9

G-a-pcv_a_th

The table is valid for the Hazen Williams coefficient C = 100 (cast iron pipework). For steel pipework, multiply the values by 1.41. For stainless steel, copper and coated cast iron pipework, multiply the values by 1.85.
When the **equivalent pipeline length** has been determined, the flow resistance is obtained from the table of flow resistance.
The values given are guideline values which are bound to vary slightly according to the model, especially for gate valves and non-return valves, for which it is a good idea to check the values supplied by the manufacturers.

VOLUMETRIC CAPACITY

Litres per minute l/min	Cubic metres per hour m^3/h	Cubic feet per hour ft^3/h	Cubic feet per minute ft^3/min	Imp. gal. per minute Imp. gal/min	US gal. per minute Us gal./min
1,0000	0,0600	2,1189	0,0353	0,2200	0,2642
16,6667	**1,0000**	35,3147	0,5886	3,6662	4,4029
0,4719	0,0283	**1,0000**	0,0167	0,1038	0,1247
28,3168	1,6990	60,0000	**1,0000**	6,2288	7,4805
4,5461	0,2728	9,6326	0,1605	**1,0000**	1,2009
3,7854	0,2271	8,0208	0,1337	0,8327	**1,0000**

PRESSURE AND HEAD

Newton per square metre N/m^2	kilo Pascal kPa	bar bar	Pound force per square inch psi	metre of water m H_2O	millimetre of mercury mm Hg
1,0000	0,0010	1×10^{-5}	1.45×10^{-4}	1.02×10^{-4}	0,0075
1000,0000	**1,0000**	0,0100	0,1450	0,1020	7,5006
1×10^{5}	100,0000	**1,0000**	14,5038	10,1972	750,0638
6894,7570	6,8948	0,0689	**1,0000**	0,7031	51,7151
9806,6500	9,8067	0,0981	1,4223	**1,0000**	73,5561
133,3220	0,1333	0,0013	0,0193	0,0136	**1,0000**

LENGTH

millimetre mm	centimetre cm	metre m	inch in	foot ft	yard yd
1,0000	0,1000	0,0010	0,0394	0,0033	0,0011
10,0000	**1,0000**	0,0100	0,3937	0,0328	0,0109
1000,0000	100,0000	**1,0000**	39,3701	3,2808	1,0936
25,4000	2,5400	0,0254	**1,0000**	0,0833	0,0278
304,8000	30,4800	0,3048	12,0000	**1,0000**	0,3333
914,4000	91,4400	0,9144	36,0000	3,0000	**1,0000**

VOLUME

cubic metre m^3	litre litro	millilitre ml	imp. Gallon imp. gal.	US gallon US gal.	cubic foot ft^3
1,0000	1000,0000	1×10^{6}	219,9694	264,1720	35,3147
0,0010	**1,0000**	1000,0000	0,2200	0,2642	0,0353
1×10^{-6}	0,0010	**1,0000**	2.2×10^{-4}	2.642×10^{-4}	3.53×10^{-5}
0,0045	4,5461	4546,0870	**1,0000**	1,2009	0,1605
0,0038	3,7854	3785,4120	0,8327	**1,0000**	0,1337
0,0283	28,3168	28316,8466	6,2288	7,4805	**1,0000**

G-at_pp-en_a_sc

FURTHER PRODUCT SELECTION AND DOCUMENTATION

Xylect

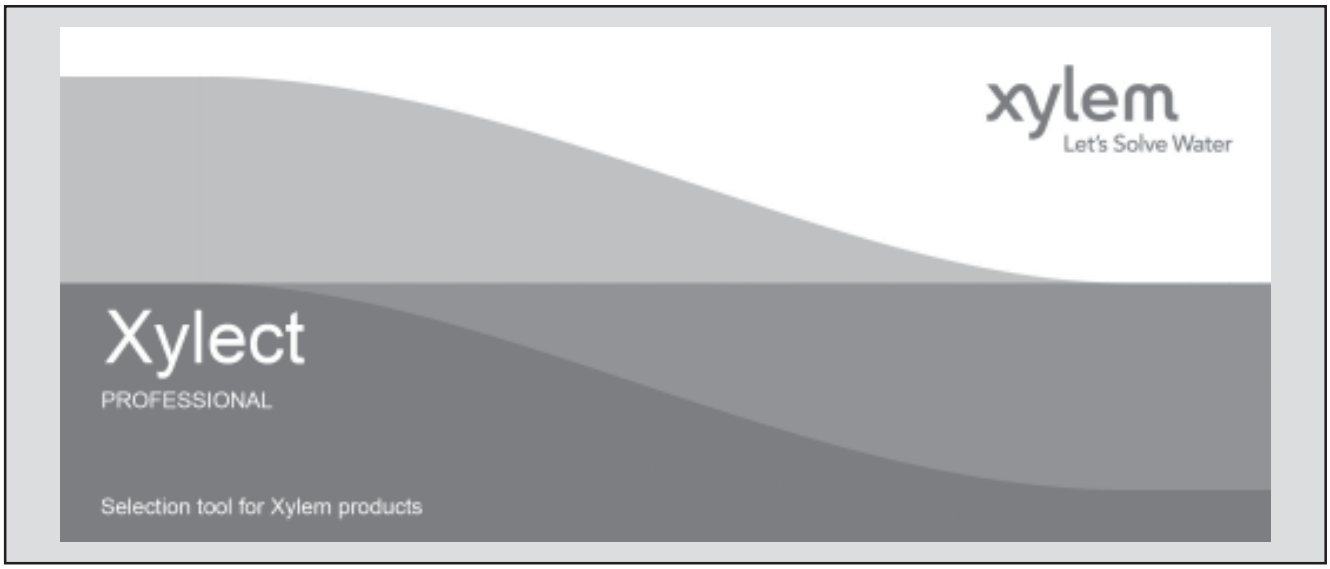

Xylect is pump solution selection software with an extensive online database of product information across the entire Lowara, and Vogel range of pumps and related products, with multiple search options and helpful project management facilities. The system holds up-to-date product information on thousands of products and accessories.

The possibility to search by applications and the detailed information output given makes it easy to make the optimal selection without having detailed knowledge about the Lowara and Vogel products.

The search can be made by:

- Application
- Product type
- Duty point

Xylect gives a detailed output:

- List with search results
- Performance curves (flow, head, power, efficiency, NPSH)
- Motor data
- Dimensional drawings
- Options
- Data sheet printouts
- Document downloads incl dxf files

The search by application guides users not familiar with the product range to the right choice.

FURTHER PRODUCT SELECTION AND DOCUMENTATION

Xylect

The detailed output makes it easy to select the optimal pump from the given alternatives.

The best way to work with Xylect is to create a personal account. This makes it possible to:

- Set own standard units
- Create and save projects
- Share projects with other Xylect users

Every user have a My Xylect space, where all projects are saved.

For more information about Xylect please contact our sales network or visit www.xylect.com.

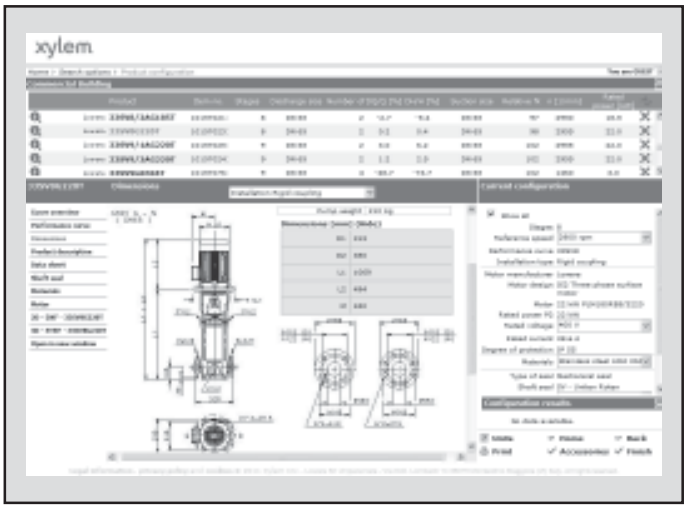

Dimensional drawings appear on the screen and can be downloaded in dxf format.

Xylem |ˈzīləm|

1) The tissue in plants that brings water upward from the roots;
2) a leading global water technology company.

We're 12,000 people unified in a common purpose: creating innovative solutions to meet our world's water needs. Developing new technologies that will improve the way water is used, conserved, and re-used in the future is central to our work. We move, treat, analyze, and return water to the environment, and we help people use water efficiently, in their homes, buildings, factories and farms. In more than 150 countries, we have strong, long-standing relationships with customers who know us for our powerful combination of leading product brands and applications expertise, backed by a legacy of innovation.

For more information on how Xylem can help you, go to xyleminc.com.

LOWARA
a xylem brand

Headquarters

LOWARA S.r.l. Unipersonale
Via Vittorio Lombardi 14
36075 Montecchio Maggiore - Vicenza - Italy
Tel.(+39) 0444 707111 - Fax(+39) 0444 492166
e-mail: lowara.mkt@xyleminc.com
web: www.lowara.com - www.completewatersystems.com

LOWARA reserves the right to make modification without prior notice.
LOWARA is a trademark of Xylem Inc. or one of its subsidiaries.